City of Patterson

STANDARD SPECIFICATIONS

Department of Public Works
1 Plaza
Patterson, CA 95363

Phone: (209) 895-8060
Fax: (209) 895-8069

Updated March 2011
Michael Willett, Director of Public Works

City of Patterson

STANDARD SPECIFICATIONS

IMPROVEMENT STANDARDS

May 2011

CITY OF PATTERSON

STANDARD SPECIFICATIONS

TABLE OF CONTENTS

SECTION 1 – GENERAL

SECTION 2 – TRAFFIC CONTROL

SECTION 3 – STREETS

SECTION 4 – LIGHTING

SECTION 5 – POTABLE WATER

SECTION 6 – NON-POTABLE WATER

SECTION 7 – SEWER

SECTION 8 – STORM DRAINAGE

SECTION 9 – PARKING

May 2011

SECTION 1 – GENERAL

SPECIFICATIONS:

1.1 IMPROVEMENT STANDARDS 1-1
1.2 DEFINITIONS 1-1
1.3 PLANS AND SPECIFICATIONS 1-3
1.4 SUPPLEMENTAL INFORMATION 1-7
1.5 DEPARTMENTAL REVIEW 1-8
1.6 IMPROVEMENT AGREEMENT 1-9
1.7 SHOP DRAWINGS AND SUBMITTALS 1-9
1.8 CONSTRUCTION REVIEW 1-9
1.9 RECORD DRAWINGS 1-11
1.10 EQUIPMENT OPERATION AND MAINTENANCE SUBMITTALS 1-11

SECTION 1

GENERAL

1.1 IMPROVEMENT STANDARDS

These Improvement Standards have been prepared by the City of Patterson to aid all persons engaged in the construction of public works within the city limits of Patterson. (Portions of these standards also apply to private work within the city limits.)

The data contained herein is not intended for use as Contract Documents for contracts between the City and a Contractor, or for contracts between a subdivider or private person and a Contractor. Rather, separate Contract Documents must be prepared for each project, with each such document containing a Special Provisions section applicable to that particular project.

Design Engineers and Contractors working in the City of Patterson should be familiar with these Improvement Standards. All Plans and Specifications for construction of improvements to be accepted by the City shall be prepared in accordance with these standards. Improvements shall be constructed in accordance with these standards.

These Improvement Standards do not cover all the work which may require acceptance by the City. Work which is not covered by these standards shall be designed in accordance with generally accepted engineering principles. It is recommended that the criteria for work which is to be accepted by the City and which is not covered by these Improvement Standards be reviewed with the City Engineer prior to the actual design to establish design criteria. (Design criteria will be based on current codes and regulations applicable to the work and the accepted principles of engineering. The City Engineer may require the Design Engineer to submit engineering calculations for the work.)

Nothing in these Improvement Standards is intended to reduce or modify applicable Federal, State or local laws, nor to create a standard to be applied retroactively to existing improvements except where specifically noted.

1.2 DEFINITIONS

When used for the construction of any improvements within the City of Patterson, the appropriate definitions and terms listed in Section 1 of the State Standards shall apply, with the following modifications:

CITY. The City of Patterson or any persons to whom the power of the City has been delegated.

CITY ENGINEER. The City Engineer of the City of Patterson acting either directly or through properly authorized agents, such agents acting within the scope of the particular duties delegated to them.

CONTRACTOR. An individual, firm, corporation, partnership or association duly licensed by the State of California who does work for City acceptance.

DESIGN ENGINEER. The registered engineer licensed by the State of California responsible for preparation of plans and specifications for work to be accepted by the City.

DIRECTOR. The Director of Public Works for the City of Patterson.

ENGINEER. The registered engineer licensed by the State of California in responsible charge of the project. (Normally this is the Design Engineer.)

ENGINEER'S ESTIMATE. The list of estimated quantities of work and the estimated cost to perform the work.

IMPROVEMENT PLANS. Plans of proposed improvements prepared by the Design Engineer, after they have been approved by the City Engineer.

IMPROVEMENT STANDARDS. The Improvement Standards of the City of Patterson which include design standards, construction standards and specifications and standard drawings.

PRODUCT DATA. All illustrations, standard schematics, performance charts, instructions, brochures, diagrams and other information furnished by the CONTRACTOR to illustrate a material, product or system for some portion of the work.

SHOP DRAWINGS. All drawings, diagrams, schedules and other data which are specifically prepared for the work by the Contractor, a subcontractor, manufacturer, supplier or distributor, which illustrates how specific portions of the work shall be fabricated or installed.

SPECIFICATIONS. Directions, provisions and requirements prepared by the Design Engineer pertaining to performance of the work.

STATE STANDARDS. Current edition of the State of California Standard Plans and Specifications as issued by the Department of Transportation (where "State" is referred to, substitute with "City of Patterson").

1.3 PLANS AND SPECIFICATIONS

All Improvement Plans, Specifications and Special Provisions shall comply with the requirements of the approved or conditionally approved development plan and/or tentative map and these Improvement Standards.

Improvement Plans submitted for preliminary review to the City or City Engineer shall be stamped, need not be signed, but should be complete. The following details and supplemental information shall be shown on plans submitted:

1. GENERAL REQUIREMENTS

   a. Improvement Plans shall show all existing activities and all improvements to be constructed.

   b. Size: The size of the Improvement Plan sheets shall be 24" x 36" or 22" x 34".

   c. Scale: The scales selected shall be sufficient to clearly show all required details when reproduced on Blueline. Preferred vertical scales are 1" = 4' in reasonably flat areas.

   d. Title Block: Each sheet within the set shall have a title block showing the project's name, sheet title, date of drawing and revisions, scale of drawings, sheet number, and the Design Engineer's name, registration number, expiration date of registration, and signature.

   e. Vertical Control: All elevations indicated in the Improvement Plans shall be based on Patterson datum. Benchmark location, number, and elevation shall be shown on the drawings.

   f. Orientation and Stationing: Insofar as practical, the plans shall be arranged so that the North shall be at the top or right edge of the sheet. The stationing on plan and profile sheets shall read from left to right or from bottom to top.

2. TITLE SHEET

   a. Title sheets shall be prepared for Improvement Plans exceeding two sheets per set, and shall show the following:

      - The entire project, drawn at a suitable engineering scale, including existing and proposed street names and lot numbers. Surrounding lot lines shall be

shown within a minimum distance of 50 feet of the project.

- Vicinity map and north arrow.
- Index of sheets.
- Legend of symbols.
- Location, description and elevation of the reference Patterson Benchmark as well as any temporary benchmark used for the project.
- Name, address, telephone number and designated agent of any agency whose facilities will be installed, utilized, interfered with, or crossed as part of the improvements, as well as a signature block for their approval. Where construction requires encroachment permits by other agencies, copies of signed encroachment permits together with evidence of any required insurance shall be submitted.
- Name, address and telephone number of the developer or his authorized representative.
- The following signature blocks:

APPROVED BY THE CITY ENGINEER, CITY OF PATTERSON REVIEWED FOR CONFORMANCE WITH CITY OF PATTERSON REQUIREMENTS ONLY. SINCE PLANS WERE PREPARED BY OTHERS, NO RESPONSIBILITY FOR THE ADEQUACY OF THE DESIGN IS EXPRESSED.

BY_____ DATE_____

APPROVED BY THE CITY WATER ENGINEER, CITY OF PATTERSON REVIEWED FOR CONFORMANCE WITH CITY OF PATTERSON REQUIREMENTS ONLY. SINCE PLANS WERE PREPARED BY OTHERS, NO RESPONSIBILITY FOR THE ADEQUACY OF THE DESIGN IS EXPRESSED.

BY_____ DATE_____

APPROVED BY THE CITY TRAFFIC ENGINEER, CITY OF PATTERSON REVIEWED FOR CONFORMANCE WITH CITY OF PATTERSON REQUIREMENTS ONLY. SINCE PLANS WERE PREPARED BY OTHERS, NO RESPONSIBILITY FOR THE ADEQUACY OF THE DESIGN IS EXPRESSED.

BY_____ DATE_____

b. The following notes shall be placed on the title sheet:

- This set of Improvement Plans is valid for construction purposes only after being signed by the City Engineer and upon issuance of permits.

- All Contractors and Subcontractors involved in the construction of this project shall attend a pre-construction conference arranged by the Developer at the Department of Public Works for construction and inspection coordination prior to commencement of any on-site construction activities.

- The current Patterson Department of Public Works Improvement Standards that have been referenced in these plans shall be considered as part of these plans.

c. The following shall not be included in the title sheet:

- Quantities List.

3. TOPOGRAPHY SHEET

A topographical survey sheet shall be included in the improvement plan set and shall show spot elevations at an appropriate interval, fences, structures, pipelines, ditches, utility poles, trees, driveways, roads, pavement, wells, rights-of-way, easements, etc., and their disposition. Disposition of existing facilities may be indicated on the topographical survey sheet by reference to appropriate sheets within the Improvement Plans.

4. GRADING AND DRAINAGE SHEET

A grading and drainage sheet shall be included in the Improvement Plans set and shall show the following:

a. A typical lot grading detail. (Specific lots may be required to provide an independent grading plan.)

b. Proposed lot corner elevations as well as any elevation differential between the project boundaries and the adjoining properties.

c. Gutter or ditch flow arrows, slopes, and grade break elevations.

d. Storm drainage pipes, manholes, valley gutters, and catch basins.

e. Detention basin location and details.

f. Location and height of any retaining walls or retaining fences. Concrete or masonry retaining walls shall be provided where the difference in grade at property line exceeds 12 inches. For grade differentials of 12 inches or less, a grading strip with a 6 horizontal:1 vertical slope may be utilized.

5. UTILITIES SHEET

A utilities sheet shall be included in the set of Improvement Plans and shall show street lights, conduits, pullboxes and connection points to the serving companies utilities, fire hydrants, water lines, valves, blowoffs, sanitary sewer lines, manholes and clean outs, sewer and water service locations, water wells, PUE's, driveways, centerline monuments, street signs, etc. If available prior to approval of improvement plans, power lines, gas lines, TV cable lines, telephone lines and mail box locations shall be provided. If not, these utilities shall be shown on the required Record Drawings. Utility company Record Drawings may be accepted in lieu of required Record Drawings provided sufficient detail is provided to coordinate the electrical, gas, telephone and TV cable line locations with other utilities as determined by the Director of Public Works.

6. PLAN AND PROFILE SHEET

A plan and profile sheet shall be included in the set of Improvement Plans showing the existing and proposed profiles of all roadways and other improvements in public rights-of-way. This sheet shall show elevations, grade breaks, vertical curves, slope, road stationing, storm drainage lines, water lines, sewer lines, irrigation lines and any areas of possible conflict between underground utilities. Indicate length and type of all sewer and

storm drain pipes and catch basins. Show elevations of pipe inverts in manholes and catch basins. Indicate length and type of all water system pipes and locations of valve junctions.

7. DETAIL SHEET

A detail sheet shall be included in the set of Improvement Plans showing typical construction details. Construction details included in the Improvement Standards, that are applicable to the work, shall be reproduced and included on the detail sheet(s).

8. EROSION CONTROL PLAN

An erosion control sheet(s) shall be included in the set of Improvement Plans for all projects unless a SWPPP is being submitted for the project. All projects, whether a SWPPP or an erosion control plan is required, shall utilize Caltrans' Construction Site Best Management Practices.

9. COMBINING REQUIRED SHEETS

Sheets may be combined or omitted depending on the complexity of the project.

1.4 SUPPLEMENTAL INFORMATION

The following supplemental information shall be submitted with the initial sets of Improvement Plans unless otherwise indicated in these Standards.

1. SOILS REPORT

The required soils report shall be prepared by a Civil or Geotechnical Engineer legally authorized to practice in the State of California. Three (3) copies shall be submitted. The soils report shall include:

a. The results of "R" value tests taken in the project site and a recommendation by the Civil or Geotechnical Engineer for design "R" values for road pavement sections.

b. Depths to groundwater measurement or other records of depth to groundwater. Civil or Geotechnical Engineer's recommendations for elevations of roads above groundwater.

2. MISCELLANEOUS CALCULATIONS

Submit calculations for pavement structural section determination plus any calculations used in the design of any retaining walls or other miscellaneous items not covered in these standards, such as domestic water flow, fire flow, sewage flow, and storm drainage calculations.

3. QUANTITIES LIST AND ENGINEER'S ESTIMATE

Quantities list and engineer's estimate shall show estimated costs, descriptions and total costs of each item of work. Engineer's estimate shall be separated into items that deal with storm drainage, domestic water systems, sanitary sewers, etc., and shall include a separate 10% contingency for the total value of work to be done.

4. PRODUCT SPECIFICATIONS

When a product is mentioned in the Improvement Plans such as pumps, motors, street lights, etc., the Design Engineer shall submit the manufacturer's specifications upon request.

1.5 DEPARTMENTAL REVIEW

The Design Engineer shall submit for review to the Public Works Department the number of Blueline sets of Improvement Plans requested, together with the initial plan check deposit and SWPPP deposit. When corrections are required, one set will be returned to the Design Engineer showing required changes. The Design Engineer shall then resubmit the corrected Improvement Plans for review. The number of sets resubmitted will be determined by the City Engineer. In order to reduce the man-hours required in checking resubmittals of Improvement Plans, the Design Engineer shall highlight, in yellow, all changes that have been made on one of the required Blueline sets resubmitted. The City will make every reasonable effort to provide all pertinent comments and identify all necessary corrections during the first improvement plan review. However, the Design Engineer's changes in response to the comments may themselves require further comments and corrections, and may necessitate changes in other areas of the design. Thus, the Design Engineer is cautioned not to assume all the changes have been identified during the first submittal review cycle.

After all corrections have been made to the satisfaction of the City Engineer, Water Engineer, Traffic Engineer and other departments, the entire set of originals shall be signed by the Design Engineer and a number of plan sets as determined by the Public Works Department submitted to the City for approval.

1.6 IMPROVEMENT AGREEMENT

The Developer shall enter into an Improvement Agreement with the City of Patterson for all of the improvements shown on the approved Improvement Plans. The Improvement Agreement shall be fully executed and required bonds or securities submitted prior to any construction being allowed to begin.

1.7 SHOP DRAWINGS AND SUBMITTALS

The Contractor shall provide the Design Engineer with Shop Drawings and Product Data required by the Specifications or Improvement Plans or as otherwise submitted for custom design work including but not limited to pumping stations, bridges and other structures. The Design Engineer shall promptly review all Shop Drawings and Product Data submitted and return reviewed Shop Drawings and Product Data directly to the Contractor; two copies of favorably reviewed Shop Drawings and Product Data shall be sent directly to the City Engineer for construction monitoring.

The Contractor shall also submit to the Design Engineer for review engineering calculations as required by the Specifications or Improvement Plans or to support the Shop Drawing and Product Data submittals. The Design Engineer shall promptly review these items and return them directly to the Contractor; two copies of favorably reviewed calculations shall be sent directly to the City Engineer.

The City Engineer may request to review Shop Drawings or Product Data for City acceptability of major components and assemblies. If such a request is made, the Design Engineer shall submit the requested Shop Drawings or Product Data to the City Engineer following favorable review by the Design Engineer. The City Engineer shall promptly review the requested submittals, make a determination on acceptability and return the submittals to the Design Engineer.

The Contractor shall submit to the Engineer all proposed substitutions of items in these Improvement Standards where an "or equal" option is not explicitly permitted. The City Engineer shall promptly review these proposed substitution submittals, make a determination on whether or not the proposed substitutions are acceptable, and return the reviewed submittals directly to the Contractor.

1.8 CONSTRUCTION REVIEW

All work accomplished and all materials furnished under these Improvement Standards shall be subject to the inspection and approval of the City Engineer. Such inspection and approval of work and materials shall not relieve the Contractor of any of his obligations to complete the work specified. Work and materials not meeting these requirements shall be corrected.

The City Engineer shall have access to the work at all times and shall be furnished every reasonable opportunity for ascertaining that the methods, materials and workmanship are in accordance with the requirements and intent of these Improvement Standards. The Contractor or his authorized agent shall be in charge of and responsible for all phases of work while it is in progress.

The City Engineer shall be notified in writing by the Contractor at least two working days prior to beginning any of the stages of work listed below and shall be notified when each of the stages has been completed. Subsequent stages shall not begin until the City Engineer has approved the previous stage.

1. Placement of culvert pipes, storm drains, sanitary sewer, waterlines and other utilities. Upon completion of the backfill of all trenches in the public rights-of-way, the Geotechnical firm providing compaction testing shall furnish the City a letter, that all trench backfill was accomplished per the recommendations of the Geotechnical Report and met the minimum compaction requirements per these Improvement Standards.

2. Placement of any layer of subbase, base or surfacing material, including the preparation of the subgrade for streets and roads, curb, gutters and sidewalk.

3. Installation of reinforcing steel and preparation of structural subgrade.

4. Placement of concrete

5. Placement of structure backfill material.

6. Testing and start-up.

In addition to the above, the Contractor shall notify the City Engineer whenever improvement work is to be performed on Saturdays, Sundays or holidays or during hours of the day when such work is normally not performed so that inspection may be provided.

The Contractor shall give the City Engineer sufficient notice regarding proposed sources of materials to be used in the work so that such tests and inspections as the City Engineer deems necessary can be performed to determine that the materials comply with these standards.

All tests of materials and work to determine compliance with these standards shall be in accordance with City approved methods and procedures. If required, the Contractor shall furnish to the City Engineer, without charge, samples of all materials to be used in the work. Samples of material from which tests are to be

made shall be taken under the supervision of the City Engineer by a recognized laboratory.

The Contractor shall be responsible for coordinating all required testing, shall notify the City Engineer when testing is to be performed and shall be responsible for the testing laboratory submitting results in a timely manner. Subsequent work shall not be started until all tests pass and written reports are filed with the City Engineer.

The Developer, Contractor or Utility shall inspect and repair all defective work done in the public rights-of-way for a period of one year from the date the work is accepted by the City, or if subsequent repairs are required, one year from the date the repairs are complete and acceptable.

1.9 RECORD DRAWINGS

Prior to the City's acceptance of the improvements, the Design Engineer shall compile and submit a set of Record Drawings showing final improvement details, corrected improvement elevations and locations, as well as any changes that occurred during construction. Record Drawings shall consist of a bond copy, an electronic (PDF) copy of the record drawings along with an electronic (AutoCAD) file for all utilities (water, sewer and storm drain lines with sizes, manholes, valves, catch basins, etc.) street rights-of-way, street names and lot lines. (The AutoCAD file will be utilized for updating utility base maps.).

Original data that has been superseded shall be crossed out, but not eradicated. All utilities that could not be shown on the construction plans shall be drawn on the Record Drawings. The Design Engineer shall provide final elevations of all catch basins, storm drainage pipe inverts, sewer flowline elevations at manholes and curb and gutter flowline. All lettering must be clear and legible. Extensive changes which cannot be shown clearly on an original sheet shall be drawn on a supplemental sheet. All supplemental sheets shall be signed by the Design Engineer and included as part of the Record Drawings. The Design Engineer shall sign the bond copies of the Record Drawings. The Record Drawings will be retained by the City.

1.10 EQUIPMENT OPERATION AND MAINTENANCE SUBMITTALS

Prior to the acceptance of the improvements by the City, the Developer shall compile and submit information and materials related to each maintainable piece of equipment, equipment assembly, or sub-assembly provided and dedicated to the City in conjunction with his work. This requirement generally applies to such items as pumps, lift stations, irrigation systems, and similar equipment and systems. It also includes valves, fire hydrants, and similar items not specifically listed in the Improvement Standards that have been provided on an "or equal" basis, where operation and maintenance of such items differs from listed items

and replacement parts and special tools are not directly interchangeable with those for listed items.

1. OPERATION AND MAINTENANCE MANUALS

Three sets of operation and maintenance manuals shall be provided for each maintainable piece of equipment, equipment assembly or sub-assembly which covers the following subjects in detail:

General

- Names, addresses, and telephone numbers of the manufacturer, the nearest representative of the manufacturer, and the nearest supplier of the manufacturer's equipment and parts.

  In addition, one or more of the following items of information shall be provided as applicable, to the satisfaction of the Director of Public Works:

Operating Instructions

- Safety precautions
- Operator prestart
- Startup, shutdown, and post shutdown procedures
- Normal operations
- Emergency operations
- Operator service requirements
- Environmental conditions

Preventive Maintenance

- Lubrication data
- Preventive maintenance plan and schedule

Corrective Maintenance

- Troubleshooting guides and diagnostic techniques
- Wiring diagrams and control diagrams
- Maintenance and repair procedures
- Removal and replacement instructions
- Spare parts and supply list
- Corrective maintenance man-hours

Appendices

- Parts identification
- Warranty information
- Personnel training requirements
- Testing equipment and special tool information

2. ROUTINE MAINTENANCE ITEMS AND SUPPLIES

Consumables, lubricants, gaskets, fuses, and similar routine maintenance items and supplies (not including fuel) sufficient for one (1) year operation.

SECTION 2 – TRAFFIC CONTROL

SPECIFICATIONS:

2.1 GENERAL 2-1
2.2 TRAFFIC CONTROL 2-1
2.3 SIGNS 2-1
2.4 BARRICADES 2-2
2.5 FLASHER SUPPORTS 2-2
2.6 DELINEATORS 2-2
2.7 FLAGGER 2-2
2.8 WARNING LIGHTS 2-3
2.9 STREET CLOSURE 2-3
2.10 RULES AND REGULATIONS 2-4

DRAWINGS:

2A STREET NAME SIGN
2B TYPICAL CONSTRUCTION SIGNS
2C PORTABLE CONSTRUCTION BARRICADES
2D TRAFFIC DELINEATORS
2E STREET CLOSURE
2F DEAD END STREET BARRICADE
2G STOP SIGN INSTALLATION

SECTION 2

TRAFFIC CONTROL

2.1 GENERAL

This Section is intended to establish general principles of traffic control, worker protection and public safety measures to be taken in the performance of all work covered by these Improvement Standards.

No specification contained herein shall be deemed to create a legal standard of conduct or duty toward the public nor shall it limit the City in the exercise of powers conferred by law in modifying these Improvement Standards under special conditions.

The requirements of the State of California, Department of Transportation, "Traffic Manual", herein referred to as the State Traffic Manual, shall take precedence over the requirements of this Section.

2.2 TRAFFIC CONTROL

The safe movement of traffic through construction areas depends upon communicating concise and proper information to the public by signs, barricades, delineators, flagmen and warning lights. All such devices necessary during construction shall be furnished by the Developer or the Contractor.

The size, shape and color of such devices as shown herein, shall be as required by the State of California, Department of Transportation.

2.3 SIGNS

The types of signs shown in Drawing No. 2-B are typical under normal conditions.

Warning signs used for nighttime conditions shall be reflectorized or illuminated. The use of orange flags in conjunction with signs is permitted if they do not at any time interfere with a clear view of the sign face.

Reflectorized signs fastened to barricades or similar supports shall have the face of the sign vertical and normal to the direction of traffic for effective visibility.

Signs are to be used only as long as necessary and then removed. During periods when the signs are temporarily unnecessary, they shall be removed or have their message covered.

2.4 BARRICADES

Barricades are intended to impose an obstacle or close off the normal flow of travel. Approved barricades are shown on Drawing No. 2-C.

Barricades shall not be used unless they are needed to separate the motorist from objects of greater hazard than the barricades themselves. Barricades should never be used primarily for delineation. The use of non-standard types of barricades, such as drums, buckets, sandbags, etc., is prohibited.

2.5 FLASHER SUPPORTS

Portable flasher supports shall be as required by the State Department of Transportation as shown on Drawing No. 2-C.

2.6 DELINEATORS

The function of delineators is to channelize traffic. They shall consist of post and paddle type markers or cylindrical or cone shaped objects, 18 to 48 inches in height, as shown in Drawing No. 2-D.

Delineators should be uniformly positioned laterally and longitudinally relative to the line of traffic and they must be maintained in an erect position.

Delineators for night use shall be reflectorized or illuminated to be visible from 500 feet under normal conditions.

When placed in close proximity to the edge of a traffic lane, delineators should be made of a material that will withstand impact without damage to them or the striking vehicle.

Consideration must also be given to the necessity for stability against knockdown from wind or from the wind wash of passing traffic.

2.7 FLAGGER

A flagger is one of the oldest and most basic means of controlling traffic. A flagger can observe changing conditions and transmit information to the motorist based on current conditions. The flagger also acts as a guard in advance of a work party by observing approaching traffic, and being prepared to warn the workmen.

A flagger should be used only when such discretionary capability is required, and not as a substitute for other warning signs and devices.

When a flagger is necessary, the flagger must convey a message, and the message must be timely and accurate. The flagger's effectiveness and the safety of the traffic and his fellow workmen depend upon the way the flagger works. Standard hand signals shall be used as shown in the State Traffic Manual.

2.8 WARNING LIGHTS

Warning lights shall be electric lanterns, electric markers or flashers provided to indicate an obstruction or restriction during periods of low visibility. Warning lights shall be placed to mark the location of obstructions. Motion may be imparted to warning lights.

Warning lights may be fastened to signs, barricades and portable flasher supports in a manner satisfactory to the Engineer.

2.9 STREET CLOSURE

During the period of construction, the Developer or Contractor shall maintain the public way so as to not unreasonably hinder, render inconvenient or interfere with the public use thereof and shall erect such barriers, signs and other measures as may be necessary and proper to provide for the safety of persons, animals and vehicles using the public right-of-way. The Public Works Director or designated representative shall be the sole judge of the interpretation of the provisions of this paragraph and all decisions rendered regarding same shall be final. When safety measures are required, all construction shall immediately cease until such measures are provided to the satisfaction of the City Manager or designated representative.

Partial temporary street closures shall be made as shown on Drawing No. 2-E. One lane for each direction of through traffic must be maintained except where flagmen are provided to control traffic, then one lane may serve both directions. When trenching is necessary across intersecting streets, the work shall be done in such a manner as to maintain two-way traffic on cross streets at all times.

Where trench line crosses the entrance to private property, access to the property shall be maintained at all times by means of a suitable bridge, until the trench may be backfilled. Such bridges shall be properly guarded and illuminated at night. Where any crosswalk is cut by the trench, suitable bridging shall be constructed. Such bridging shall be at least 4 feet in width, shall have suitable hand railing, and shall be properly guarded and illuminated at night.

The complete closure of a street is allowed only when authorized by the City. Such closure shall be accomplished only through the use of Type III Barricades as shown on Drawing No. 2-C.

Permanent closures and temporary closures in new developments at dead end streets and where pavement narrows at the edge of the development shall be made as shown in Drawing No. 2-F.

2.10 RULES AND REGULATIONS

All work performed and all materials used by the Developer or Contractor shall comply with the following: State Labor Code, California Administrative Code, Construction Safety Order, Title B, Subchapter 4; and all other applicable Federal, State and local laws and regulations.

Specifically, the Developer or Contractor shall furnish, install and maintain all shoring, bracing and sheeting. Any damage resulting from a lack of adequate shoring, bracing or sheeting shall be repaired at the Developer's or Contractor's expense.

Additional requirements may be imposed by the Engineer in the interest of public safety.

All excavations shall be in compliance with Section 1540(a) (1) of the Construction Safety Orders (Title 8, California Administrative Code Section 1540) which states:

(1) "Prior to opening an excavation, effort shall be made to determine whether underground installations: i.e., sewer, water, fuel, electric lines, etc., will be encountered and, if so, where such underground installations are located. When the excavation approaches the approximate location of such an installation, the exact location shall be determined by careful probing or hand digging; and when it is uncovered, adequate protection shall be provided for the existing installation. All known owners of underground facilities in the area concerned shall be advised of proposed work at least 48 hours prior to the start of actual excavation."

The Developer or Contractor shall be responsible for the preservation of, and any damage to, both private and public property in accordance with the current State Standards – Section 7-1.11 (Preservation of Property).

Contractor shall assume sole and complete responsibility for job site conditions during the course of construction of the project including the safety of all persons and property. This requirement shall apply continuously and not be limited to normal working hours and the contractor shall defend, indemnify and hold the City Engineer and the City of Patterson and their directors, officers, employees, agents and volunteers harmless from any and all liability, real or alleged, in connection with the performance of work on the project excepting for liability arising from the sole negligence of the City Engineer or City of Patterson.

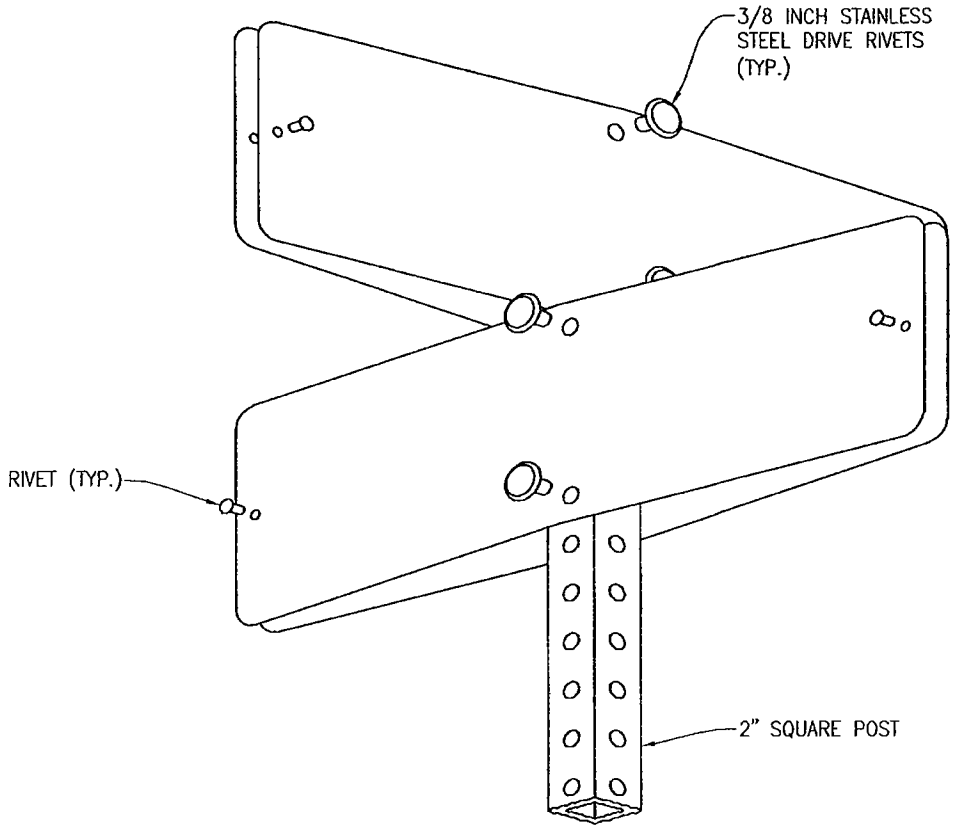

STREET NAME SIGN HARDWARE

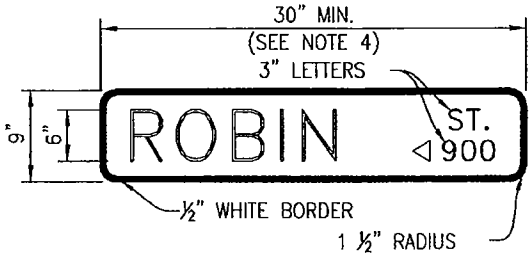

STREET SIGN

NOTES:

1. STREET NAME SIGN TO BE PLACED 7 FEET, 6 INCHES ABOVE GROUND.
2. SEE DRAWING No. 2-G FOR MOUNTING LOCATIONS AND INSTALLATION DETAILS.
3. STREET NAME SIGN SHALL BE 0.080-INCH ALUMINUM. BACKGROUND SHALL BE HIGH INTENSITY GRADE 3M REFLECTIVE VINYL SHEETING. SIGN PLATE COLOR SHALL BE No. 3279 BROWN WITH A ½ INCH REFLECTIVE WHITE BORDER. SIGN LEGEND SHALL BE 3M REFLECTIVE WHITE VINYL "C" HIGHWAY GOTHIC LETTERING.
4. LENGTH OF 36 INCH AND 42 INCH MAY BE USED TO ACCOMMODATE LONGER STREET NAMES.
5. INDIVIDUAL STREET SIGN LAYOUTS SHALL BE APPROVED BY THE PLANNING DEPARTMENT PRIOR TO FABRICATION.

CITY OF PATTERSON IMPROVEMENT STANDARDS

STREET NAME SIGN

APPROVED: Michael Willett DATE: 5/12/11

DRAWING NO. 2 - A

Feb 28, 2011 - 10:32am
S:\LB15\Library\Details\City of Patterson\2 - A.DWG

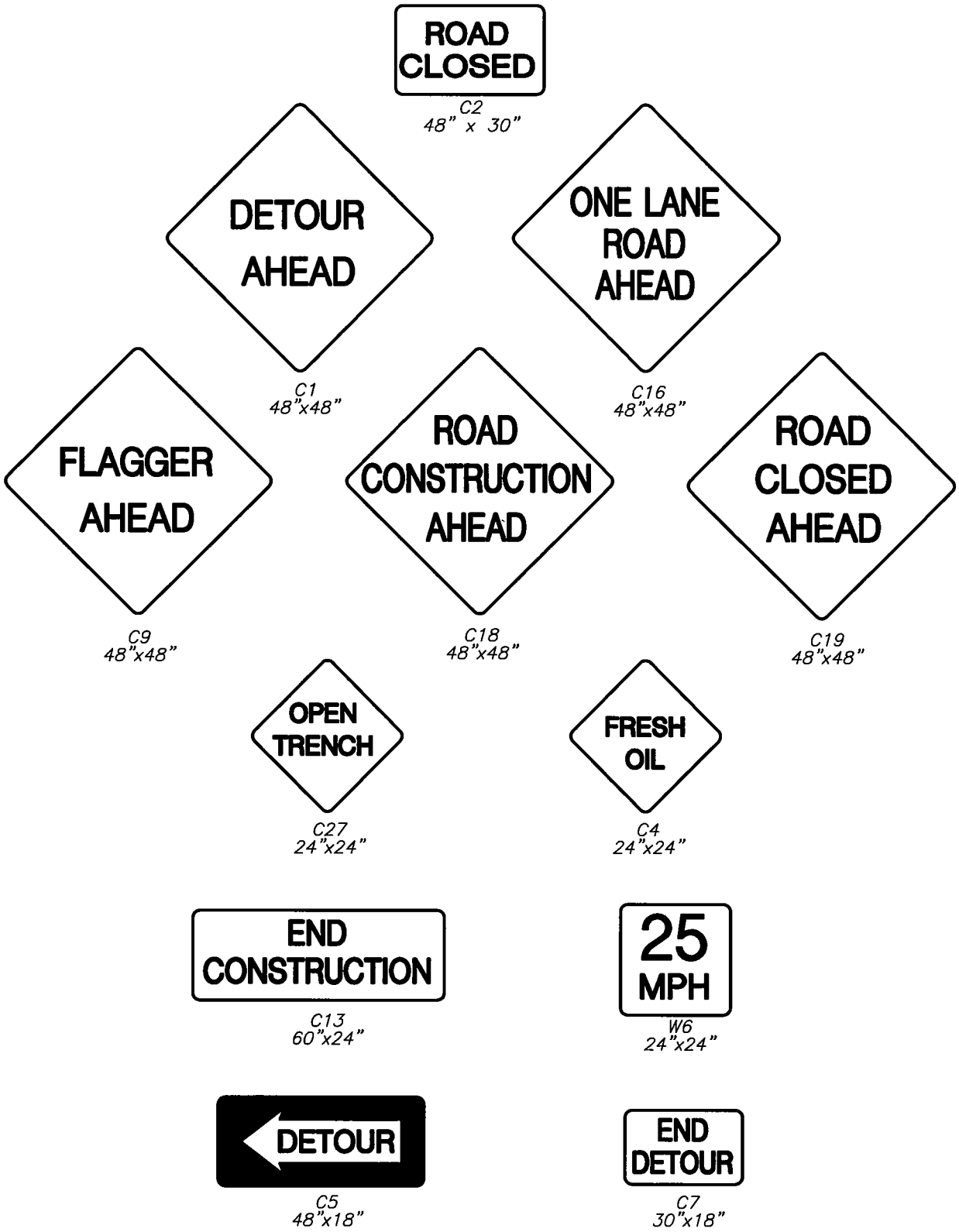

CITY OF PATTERSON IMPROVEMENT STANDARDS

TYPICAL CONSTRUCTION SIGNS

APPROVED BY: Ignacio Lopez DATE: 8-3-04

DRAWING NO. 2 - B

Feb 14, 2003 - 10:01am \\Server_1\D\Library\Details\City of Patterson\02-20-02 DETAILS\2 - B.dwg

BARRICADE AND PORTABLE FLASHER SUPPORT CHARACTERISTICS

TYPE	1	2	3	PORTABLE FLASHER SUPPORT
WIDTH OF RAIL	8" – 12"	8" – 12"	8" – 12"	TOP – 8" – 12" BOTTOM – 4" MIN.
LENGTH OF RAIL	2' MIN.	32" – 4'	3' MIN.	31" MAX.
WIDTH OF STRIPE	6"	6"	6"	4" OR 6"
HEIGHT	3' MIN.	3' MIN.	5' MIN.	30" MIN.
NUMBER OF RAIL FACES REFLECTORIZED	2	4	3 IF FACING TRAFFIC IN ONE DIRECTION. 6 IF FACING TRAFFIC IN TWO DIRECTIONS.	2 IF TOP RAIL IS 12" WIDE. 4 IF TOP RAIL IS LESS THAN 12" WIDE

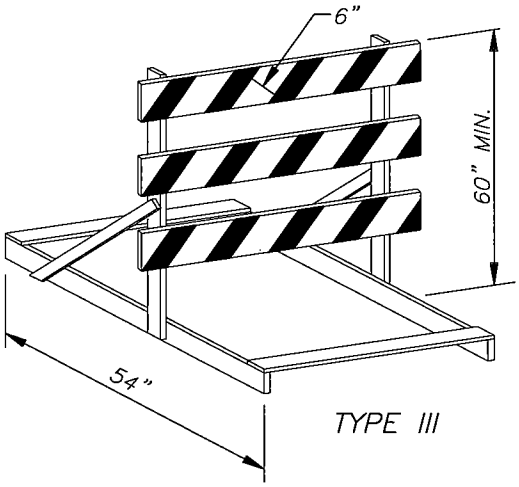

TYPE III

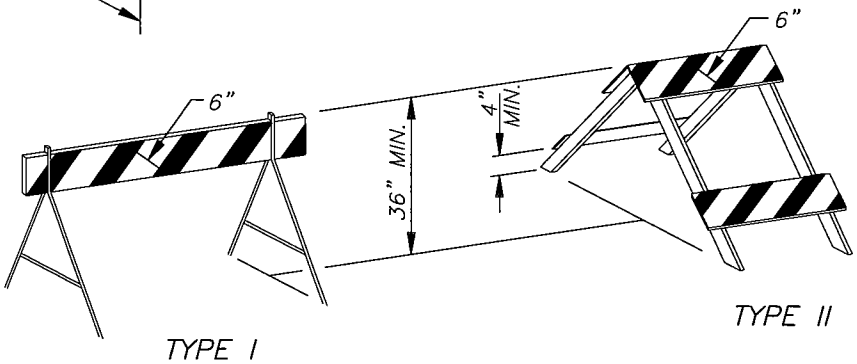

TYPE I

TYPE II

NOTES:

1. REFLECTORS AS REQUIRED BY THE CITY ENGINEER OR DIRECTOR OF PUBLIC WORKS.

CITY OF PATTERSON IMPROVEMENT STANDARDS

PORTABLE CONSTRUCTION BARRICADES

APPROVED BY: Ignacio Lopez DATE: 8-3-04

DRAWING NO. 2 - C

Feb 14, 2003 – 1:08pm \\Server_1\D\Library\Details\City of Patterson\02-20-02 DETAILS\2 – C.DWG

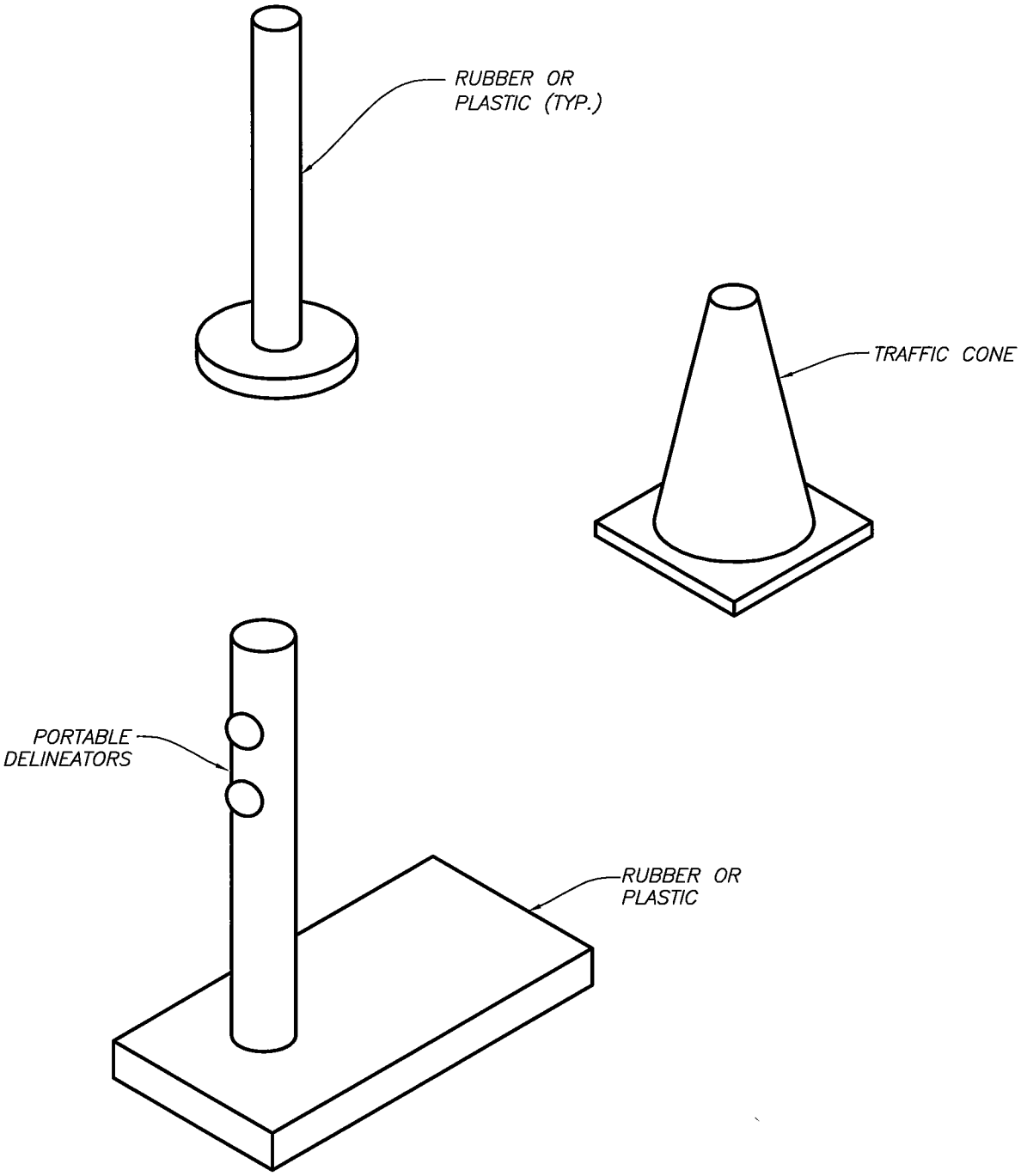

CITY OF PATTERSON IMPROVEMENT STANDARDS

CITY OF PATTERSON INCORPORATED 1919

TRAFFIC DELINEATORS

APPROVED BY: Ignacio Lopez DATE: 8-3-04

DRAWING NO. 2 - D

Feb 14, 2003 – 10:49am
\\Server_1\D\Library\Details\City of Patterson\02-20-02 DETAILS\2 – D.DWG

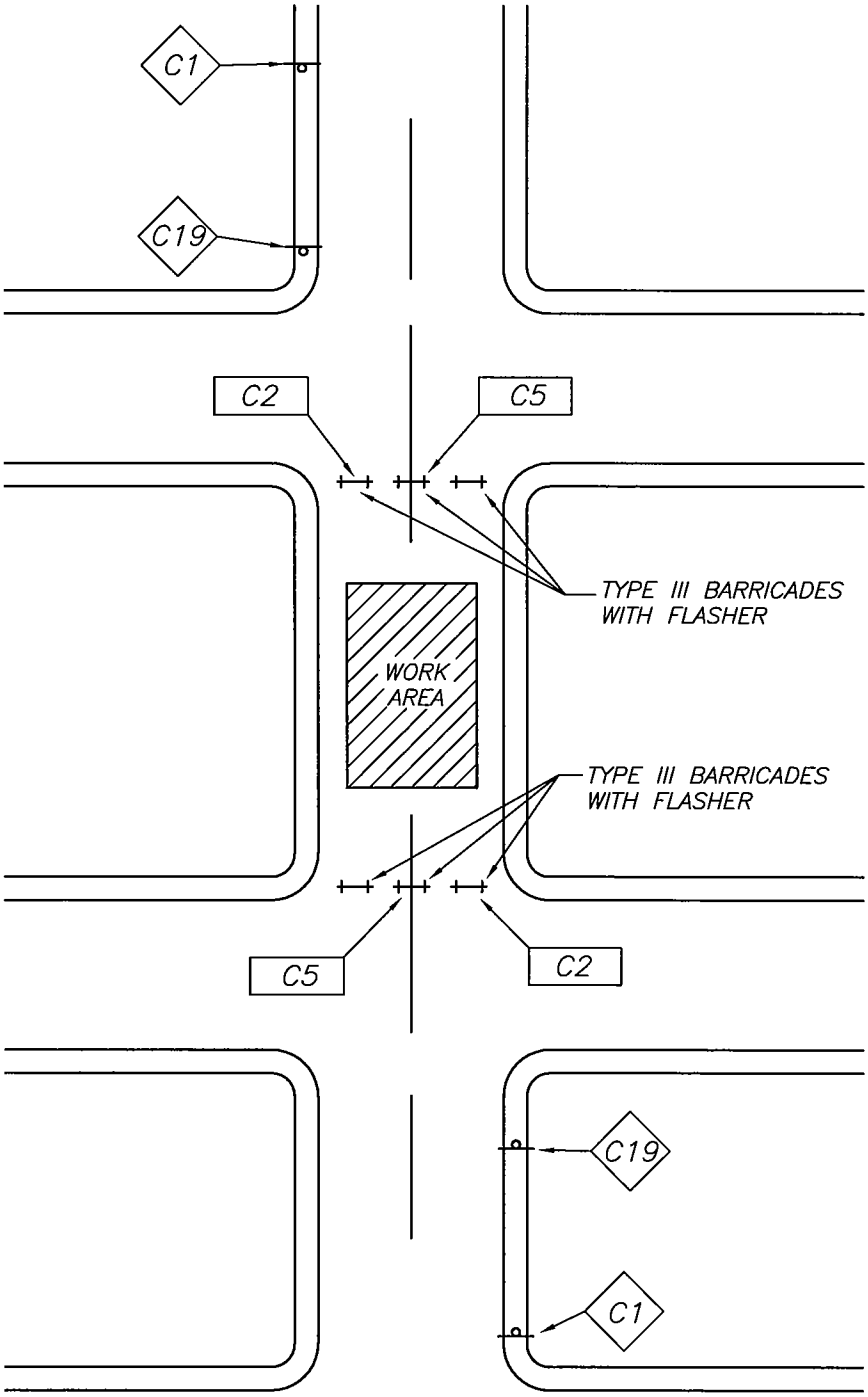

NOTES:

1. PLACEMENT OF BARRICADES SHALL NOT PRECLUDE ENTRANCE OF EMERGENCY VEHICLES OR LOCAL TRAFFIC.
2. ADDITIONAL DETOUR SIGNS MAY BE REQUIRED BY THE CITY ENGINEER.

OR SIGN PER DRAWING NO. 2 – B

TYPE III BARRICADE PER DRAWING NO. 2 – C

CITY OF PATTERSON IMPROVEMENT STANDARDS

CITY OF PATTERSON INCORPORATED 1919

STREET CLOSURE

APPROVED BY: Ignacio Lopez DATE: 8-3-04

DRAWING NO. 2 - E

Feb 14, 2003 – 11:13am
\\Server_1\D\Library\Details\City of Patterson\02-20-02 DETAILS\2 – E.dwg

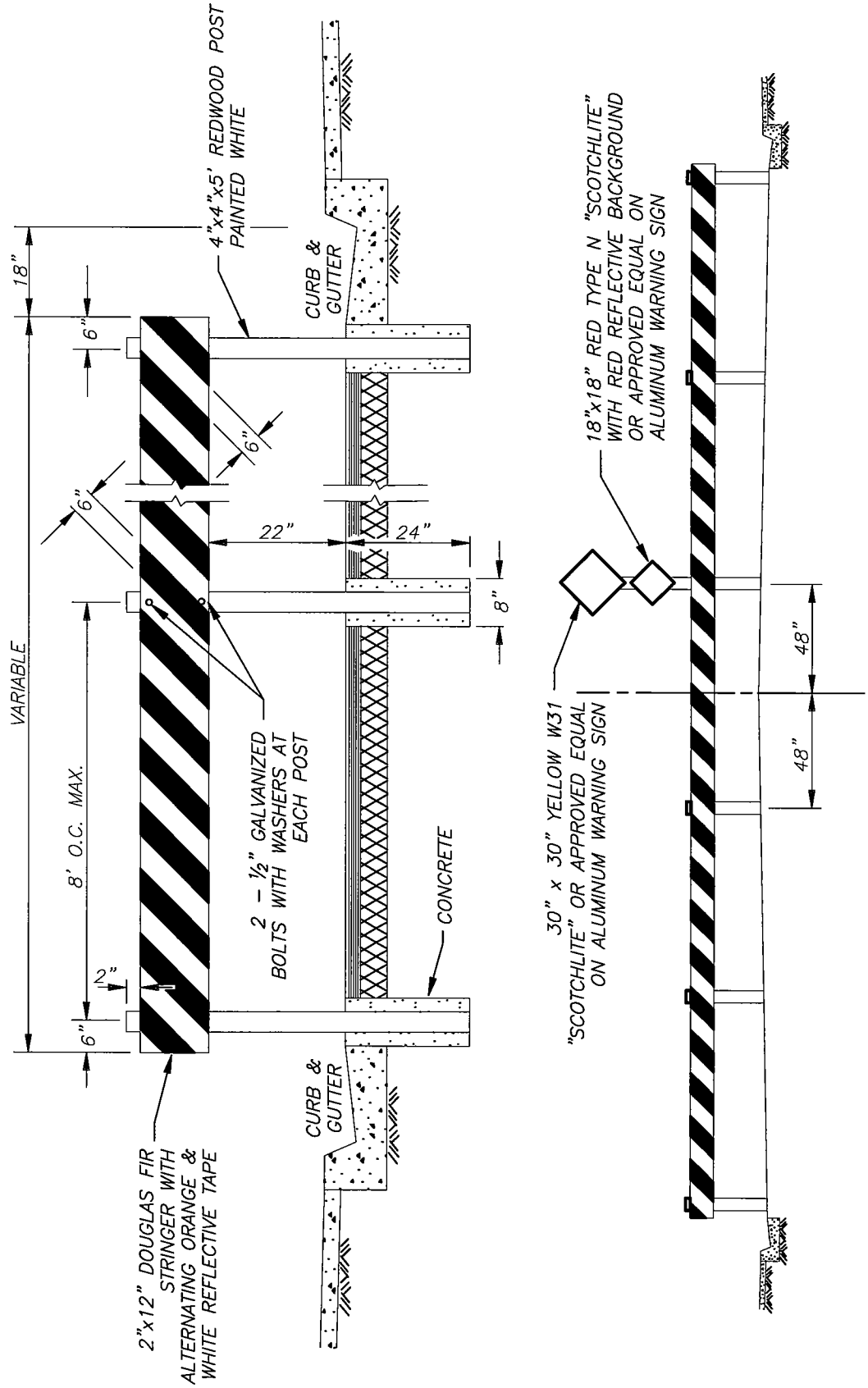

CITY OF PATTERSON IMPROVEMENT STANDARDS

DEAD END STREET BARRICADE

APPROVED BY: Ignacio Lopez DATE: 8-3-04

DRAWING NO. 2 - F

Feb 14, 2003 - 1:35pm \\Server_1\D\Library\Details\City of Patterson\02-20-02 DETAILS\2 - F.dwg

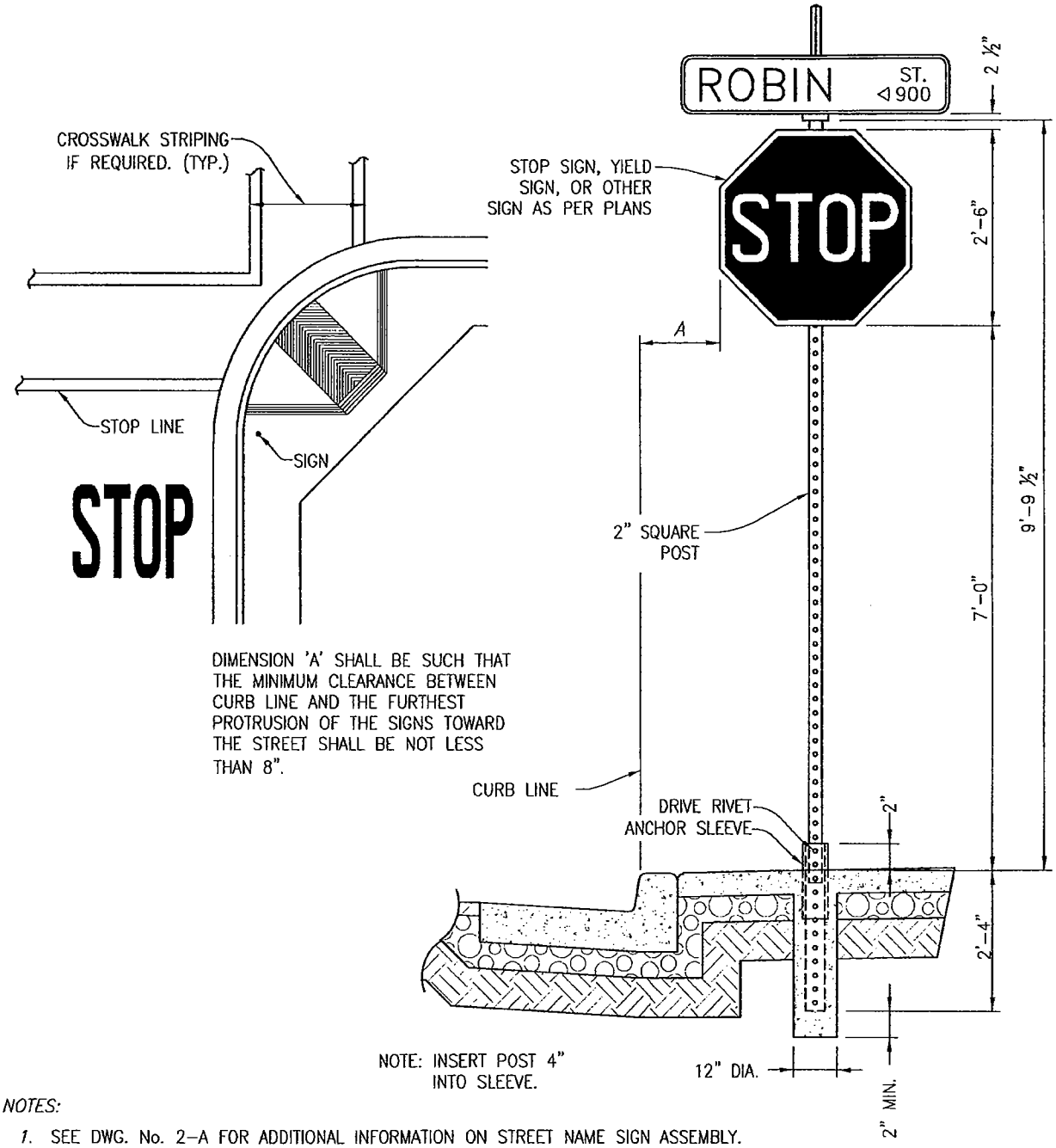

NOTES:

1. SEE DWG. No. 2-A FOR ADDITIONAL INFORMATION ON STREET NAME SIGN ASSEMBLY.
2. CONCRETE FOOTING NOT REQUIRED IF POST INSTALLED IN CONCRETE.
3. STOP SIGNS SHALL BE REFLECTIVE TYPE: 3M HIGH INTENSITY GRADE REFLECTIVE MATERIAL OR EQUAL.
4. "STOP", PAVEMENT MARKING STOP LINE AND CROSS WALK STRIPING SHALL BE OF THERMOPLASTIC MATERIAL IN ACCORDANCE WITH SECTION 84-2, OF THE STATE STANDARD SPECIFICATIONS.
5. LOCATE POLE IN CONCRETE AREA UNLESS SHOWN OTHERWISE ON PLANS.
6. SIGN POST SHALL BE 14 GAUGE 2-INCH SQUARE PERFORATED GALVANIZED STEEL WITH 6 GAUGE 2 ¼-INCH SQUARE PERFORATED GALVANIZED STEEL ANCHOR SLEEVE AS MANUFACTURED BY UNISTRUT CORPORATION.

CITY OF PATTERSON IMPROVEMENT STANDARDS

STOP SIGN INSTALLATION

APPROVED BY: Michael Willett DATE: 5/12/11

DRAWING NO. 2 - G

Feb 28, 2011 - 10:35am
s:\LB15\Library\Details\City of Patterson\2 - G.dwg

SECTION 3

STREETS

3.1 GENERAL

Street Improvements in the public rights-of-way shall only be constructed by a Developer or Contractor and shall conform to these Improvement Standards:

1. Only a Developer or Contractor with an appropriate license and required insurance may perform the work described herein.

2. Any Street Improvement damaged by the Developer or Contractor shall be repaired by the Developer or Contractor at his expense as required by the City Engineer.

3.2 GEOMETRIC DESIGN

The street widths shall conform with these Improvement Standards.

The gutter grade shall not be less than 0.30%. In special situations, the grade may be reduced if approved by the City Engineer.

The standard street cross slope shall be 2%. In special situations, the cross slope grade may be modified with the approval of the Engineer.

The street shall be designed to collect storm water at intersections whenever possible.

Horizontal curves shall have the following minimum radii:

Residential and Cul-de-Sac Streets	-	300 feet
Collector Streets	-	500 feet
Commercial/Industrial Streets	-	650 feet
4 and 5 Lane Arterial Streets	-	1,100 feet
4 and 5 Lane Major Arterial Streets	-	1,400 feet

There shall be a tangent between reversing curves of at least 150 feet on arterial and industrial streets and 50 feet on residential and collector streets.

Street intersections shall be as near right angles as practical. In no case shall the angle of an intersection be less than 70 degrees. Streets located on opposite sides of an intersecting street shall have a continuous centerline or have their centerline separated by not less than 125 feet. Greater distances may be required on higher classification streets based on anticipated turning volumes.

Where offset intersections are collector streets, commercial/industrial or arterial streets offset intersections shall be designed to avoid conflicting left turns.

The maximum length of a cul-de-sac shall be 400 feet as measured from the centerline of the intersecting street to the radius point of the cul-de-sac.

Cul-de-sacs shall be open end design to allow pedestrian access to adjacent streets unless otherwise approved by the Planning Director.

3.3 STRUCTURAL DESIGN

The R-value design method used by the California Department of Transportation shall be used as a basis to determine the structural section of the streets. Whenever the pavement calculations produce more than 8-inches of base rock, a safety factor may be used at the option of the Engineer.

The Traffic Index (T.I.) shall be determined from traffic counts where they are available, or as determined by the City Engineer. A 10-year design life shall be used.

Where sufficient information is not available to determine the structural section using the above data, the following minimums shall be used.

Street	T.I.
Arterial	9
Collector	7
Industrial	8
Residential	6
Cul-de-sac	5

In no case shall the ultimate thickness of asphalt concrete be less than 3 1/2 inches for arterial streets and less than 2 1/2 inches for all other streets.

In no case shall the thickness of aggregate base be less than 6 inches for any street.

3.4 CLEARING

Clearing and grubbing shall be done in accordance with Sections 16-1.01, 16-1.02 and 16-1.03 of the State Standards.

3.5 EARTHWORK

Earthwork shall be performed as set forth in Sections 19-1 and 19-2 of the State Standards and in accordance with the recommendations of the geotechnical engineering investigation report prepared for the project.

All compaction of fill materials shall be in accordance with Section 19-5 of the State Standards; except that the Contractor or Developer will only be required to strip the original ground of vegetation and compact the top 6 inches of original ground in place to not less than 95% of maximum dry density in accordance with ASTM Designation D1557 before the fill is placed.

3.6 SUBGRADE

All clods shall be broken and all rocks, hard ribs and earth lumps over 2 1/2 inches in greatest dimension and other unsuitable material such as roots shall be removed from the job site. The top 6 inches of subgrade material shall be compacted to a firm, stable condition with approved equipment to not less than 95% of maximum dry density in accordance with ASTM Designation D1557.

The finished subgrade shall not vary more than 0.05 foot above the planned grade at any point. Care shall be taken to obtain compaction around existing manholes and water valves.

3.7 AGGREGATE BASE

The aggregate base material shall conform to the requirements of Section 26 of the State Standards for Class 2, 3/4-inch maximum combined grading.

An exception to Section 26-1.04 shall be that a single layer up to 0.7 foot may be permitted to be placed.

Motor graders may be permitted to spread and shape the aggregate base materials, provided this method does not result in segregation of material. The aggregate base shall be maintained in a well-mixed optimum moisture condition.

Contractor shall furnish the City a Certificate of Compliance for all aggregate base used.

3.8 ASPHALT CONCRETE

The asphalt concrete shall conform to the requirements of Section 39 of the State Standards. Asphalt concrete used in all but the final course shall be Type B with 3/4-inch maximum medium grading. Asphalt concrete used in the final course shall be Type B as follows:

- Arterial and Commercial/Industrial Streets - 3/4-inch maximum, medium grading

- Collector and Residential Streets - 1/2-inch maximum, medium grading

The asphalt grade shall be PG 70-10 as specified by the latest revision of the State Standards unless otherwise approved by the City Engineer.

Contractor shall furnish the City a Certificate of Compliance for all asphalt concrete used.

3.9 ASPHALT PAINT BINDER (tack coat)

An asphalt paint binder shall be applied in conformance with Section 39-4.02 of the State Standards.

3.10 HEADER BOARDS

Header boards shall be constructed to protect the edges of the asphalt concrete where streets are partially completed.

The boards shall be either Redwood or Douglas Fir with an American Wood Preservers Bureau Stamp indicating its use for ground contact and application of LP22 water borne preservative or approved equal.

The boards shall be 2-inch x 6-inch nominal dimension of appropriate material.

3.11 CONCRETE

Portland Cement concrete, unless otherwise specified, shall be Class 3 as defined in the State Standards with a minimum 28-day compressive strength of 2,500 pounds per square inch and a maximum slump of 3 inches. Concrete shall consist of Portland Cement, water and aggregate. Portland Cement shall be Type II. Aggregate shall be washed before use and be free from any foreign matter.

The aggregate shall be graded to provide a plastic, workable mixture of maximum size aggregate of 3/4-inches. The water shall be potable and no admixtures shall be used without approval of the Design Engineer and the City Engineer.

The cement, water and aggregates shall be combined at the batch plant and be thoroughly mixed. No water shall be added to the mixture after leaving the batch plant without approval of the Engineer. All concrete shall be in place within 1-1/2 hours from the time the cement is added to the aggregate.

The temperature of concrete as mixed and placed shall not be less than 55° Fahrenheit nor greater than 90° Fahrenheit.

The concrete shall be consolidated by tamping or vibrating. Concrete which has rock pockets or honeycombing after curing shall be removed and replaced.

All concrete shall be cured in accordance with Section 90-7 of the State Standards.

The Contractor shall furnish the City a Certificate of Compliance for all Portland Cement concrete used.

3.12 CURBS, GUTTERS AND SIDEWALKS

Curbs, gutters and sidewalks shall be constructed in accordance with these Improvement Standards and Section 73 of the State Standards.

Curbs, gutters and sidewalks shall be placed monolithically where appropriate. Native material bases and subbases under curbs, gutters and sidewalks shall be conditioned in accordance with the recommendations of the soils report prepared for the project. Prior to placement of concrete, the Geotechnical Engineer shall provide the City Engineer a written certification that the native material bases and subbases for the curbs, gutters and sidewalks were conditioned in accordance with the recommendations of the soils report.

Sidewalks shall have a cross-slope toward the curb face of 1/8-inch per foot minimum to 1/4-inch per foot maximum.

Sidewalks when not placed monolithically with curbs and gutters shall be fixed form construction in accordance with 73-1.05A of the State Standards.

Sidewalks which are required against the edge of right-of-way shall be placed 1 inch from the property line to provide space for lot corner monuments.

3.13 DRIVEWAY APPROACHES

Approaches shall be constructed in accordance with these Improvement Standards and Section 73 of the State Standards.

Commercial, industrial or other high volume driveway approaches on arterial and collector/industrial streets shall be located as far as practical from the nearest curb return and may be prohibited within 200 feet where the intersection is signalized or planned for signalization. All residential driveway approaches located on arterial and collector streets, shall be a minimum of 25 feet from the end of the curb return.

Driveways located on streets with roundabouts, regardless of driveway classification, shall be a minimum of 60 feet from the end of the curb return.

Approaches shall be located so they will not interfere with intersecting sidewalks, traffic signals, light poles, fire hydrants, or other public improvements unless specific approval is given by the City Engineer and the necessary adjustments to the improvements are accomplished without cost to the City.

Subgrade preparation and certification of subgrade preparation shall be required for curbs, gutters and sidewalks.

3.14 ALLEYS

Alleys shall be constructed in accordance with these Improvement Standards.

The subgrade, aggregate base and asphalt concrete shall be constructed as required in Sections 3.6, 3.7 and 3.8 respectively of these Improvement Standards.

3.15 VALLEY GUTTERS

Valley gutters designed to permit drainage across a street shall be constructed as shown on Drawing No. 3-P.

3.16 PEDESTRIAN RAMPS FOR THE PHYSICALLY CHALLENGED

Pedestrian ramps for the physically challenged shall be constructed at all intersections as shown on Drawings No. 3-T, 3-U or 3-V as applicable.

The ramps must comply with the latest requirements of Section 3307 "Ramps" of the California State Accessibility Standards, State Architects Office. This information shall be placed in the Improvement Plans by the Design Engineer.

3.17 RAISING UTILITY BOXES

Utility boxes and manholes shall be raised by the Developer or Contractor to conform to these Improvement Standards. Utility boxes include, but are not limited to, sewer manholes, sewer lampholes, water valves, storm drain manholes and survey monuments.

Where existing utility boxes are in the work area, their frames and covers shall be removed before subgrade compaction is made and a cover shall be placed to prevent dirt and loose materials from entering the facility.

Base and surface material shall be placed over the covers, after which the frames and covers shall be set to finish grade.

3.18 TESTING

Material testing to show conformance with these Improvement Standards shall be done in accordance with Section 1.8 of these Improvement Standards.

3.19 ACCESS CONTROL WALLS

Where required by the City, access control walls shall be constructed. Access control walls shall be reinforced masonry or concrete and shall be a minimum of 6 feet in height. Architectural approval of the wall design is required from the Planning Director.

Walls shall be shown on the Improvement Plans. A building permit shall be obtained by the Developer from the Chief Building Official prior to commencement of work on the walls located outside public rights-of-way.

3.20 MONUMENTS

All survey monuments shall be visibly marked or tagged with the certificate number of the surveyor or civil engineer setting them, according to Section 8772 of the Professional Land Surveyors Act.

Permanent survey monuments set in pavement areas shall conform to Drawing No. 3-W. Monuments found in a perishable condition shall be rehabilitated with a permanent monument according to Section 8773.3 of the Professional Land Surveyors Act.

The instructions as set forth in the 1973 "Manual of Instructions for the Survey of Public Lands of the United States", published by the Bureau of Land Management, Department of Interior, Washington, D.C., shall be followed for the restoration of lost or obliterated corners, for those corners that were established based on the Public Lands Surveying System.

Survey monuments shall be set at all lot corners, angle points and points of curvature. Monuments shall be 1-inch O.D. (3/4-inch I.D.) galvanized iron pipe, 24 inches in length set 6 inches below grade.

Subdivision boundary monuments, except those set in street pavement, shall be 1-1/2 inches O.D. (1-1/4-inches I.D.) galvanized iron pipe, 24 inches in length, set 12 inches below finish grade. Survey boundary monuments in street pavement shall conform to Drawing No. 3-W.

Permanent survey monuments shall be set at all street centerline intersections, angle points and points of curvature. They shall also be placed at all section and quarter corners within the subdivision.

Section and quarter corner monuments shall be constructed and marked according to the 1973 "Manual of Instruction". Monuments located within street sections shall utilize a monument box conforming to Drawing No. 3-W.

3.21 PAVING ADJACENT TO EXISTING STREETS

Whenever new curb and gutter is constructed along an existing street, paving of the adjacent roadway is required. Pavement structural sections shall be designed in accordance with the traffic index of the street.

If the structural section of the existing street along which curb and gutter is to be constructed is inadequate or substandard, the street shall be reconstructed to the centerline or brought to standard by calculated overlay thickness.

If the adjacent road conforms to current standards, the paving may extend to the existing edge of pavement.

Feb 13, 2003 – 4:36pm
\\Server_1\D\Library\Details\City of Patterson\02-20-02 DETAILS\3 – A.dwg

CITY OF PATTERSON IMPROVEMENT STANDARDS

TYPICAL STREET SECTION

APPROVED BY:

DATE: 8-3-04

DRAWING NO. 3 - A

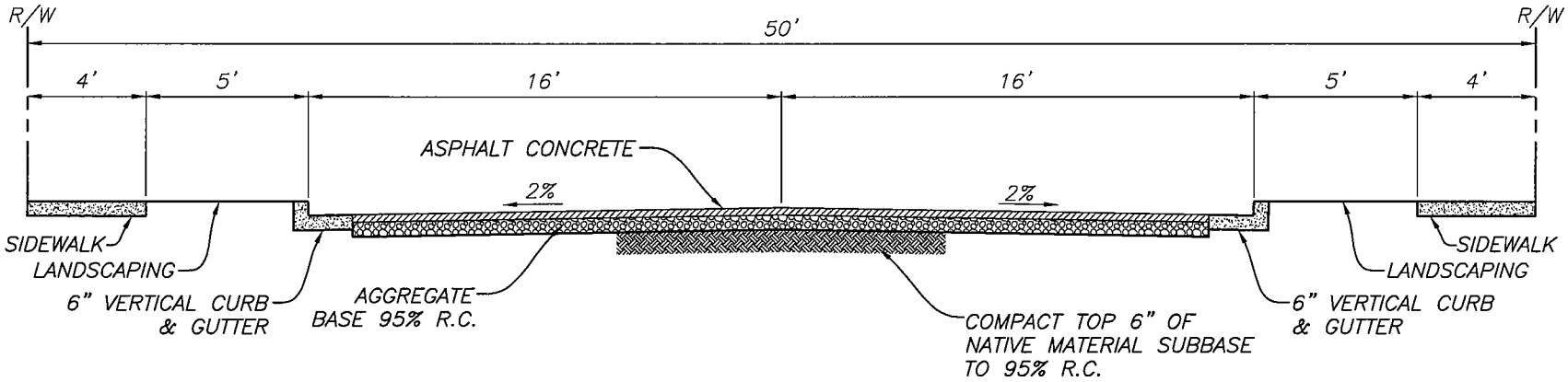

50' RESIDENTIAL AND CUL-DE-SAC STREET

Feb 13, 2003 – 4:36pm
\\Server_1\D\Library\Details\City of Patterson\02-20-02 DETAILS\3 – B.dwg

CITY OF PATTERSON IMPROVEMENT STANDARDS

TYPICAL COLLECTOR STREET SECTION

APPROVED BY:

DATE: 8-3-04

DRAWING NO. 3 - B

NOTE: 70–FOOT STREET SECTION IS FOR INFILL PROJECTS,
74–FOOT STREET SECTION IS FOR ALL OTHER PROJECTS.

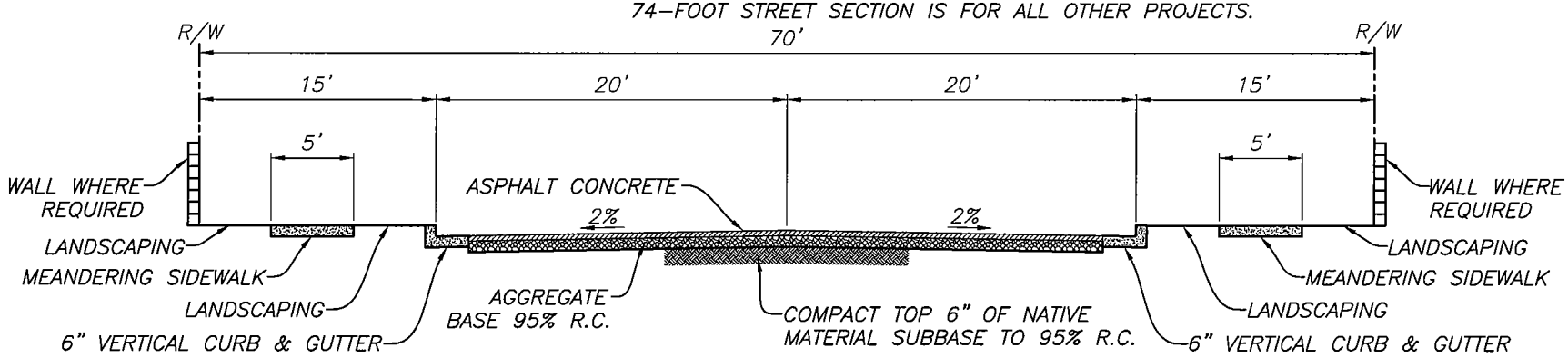

70' RESIDENTIAL COLLECTOR STREET

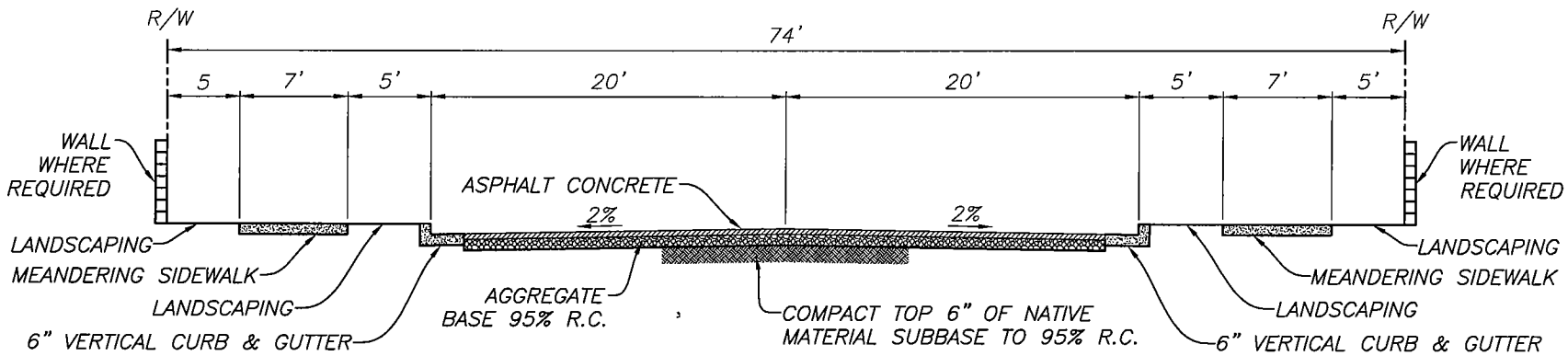

74' RESIDENTIAL COLLECTOR STREET

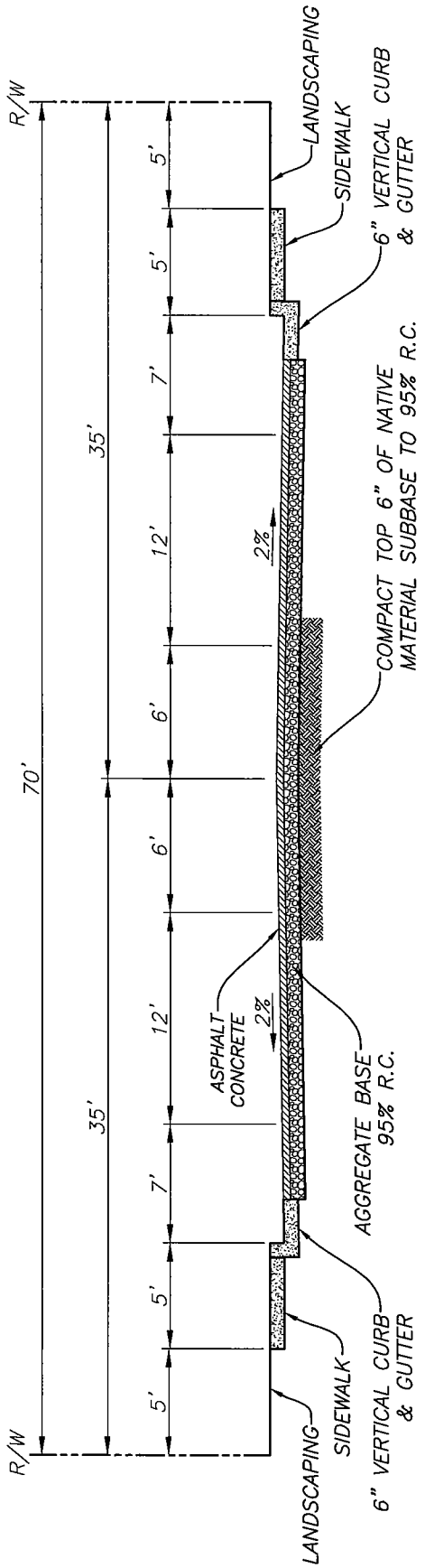

70' COMMERCIAL/INDUSTRIAL STREET

CITY OF PATTERSON IMPROVEMENT STANDARDS

CITY OF PATTERSON INCORPORATED 1919

COMMERCIAL / INDUSTRIAL STREET SECTION

APPROVED BY: Ignacio Lopez

DATE: 8-3-04

DRAWING NO. 3 - C

Feb 13, 2003 - 4:36pm
\\Server_1\D\Library\Details\City of Patterson\02-20-02 DETAILS\3 - C.dwg

CITY OF PATTERSON IMPROVEMENT STANDARDS

TYPICAL PARTIAL WIDTH STREET SECTION

APPROVED BY:

DATE: 8-3-04

DRAWING NO. 3 - D

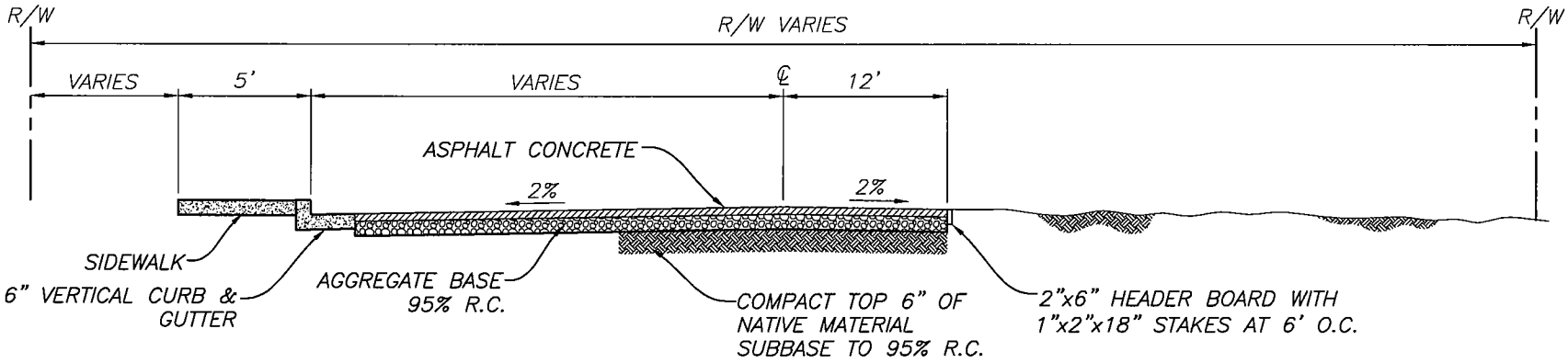

PARTIAL WIDTH STREET

NOTES:

1. THE PARTIAL WIDTH STREET SECTION IS ONLY PERMITTED WHERE APPROVED BY THE DIRECTOR OF PUBLIC WORKS.
2. PARTIAL WIDTH STREET SECTIONS MUST BE DESIGNATED ON THE PLANS AS "PARTIAL WIDTH" ADJACENT TO THE STREET NAME.

Feb 13, 2003 – 4:36pm
\\Server_1\D\Library\Details\City of Patterson\02-20-02 DETAILS\3 – E.dwg

CITY OF PATTERSON IMPROVEMENT STANDARDS

4 AND 5 LANE ARTERIAL STREET SECTIONS

APPROVED BY: Mario Gregg

DATE: 8-3-04

DRAWING NO. 3 - E

NOTE: NO PARKING

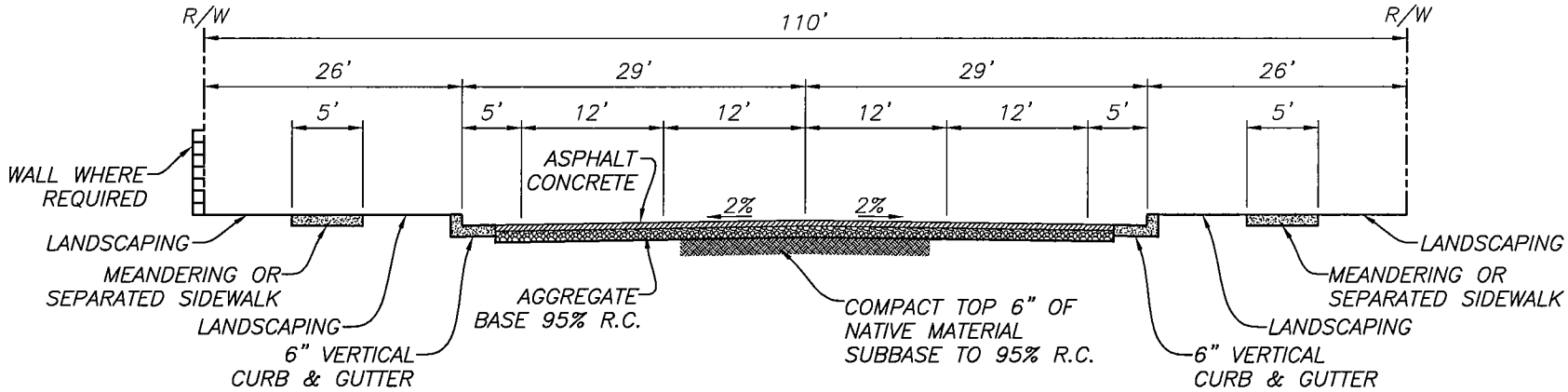

110' 4 LANE ARTERIAL STREET

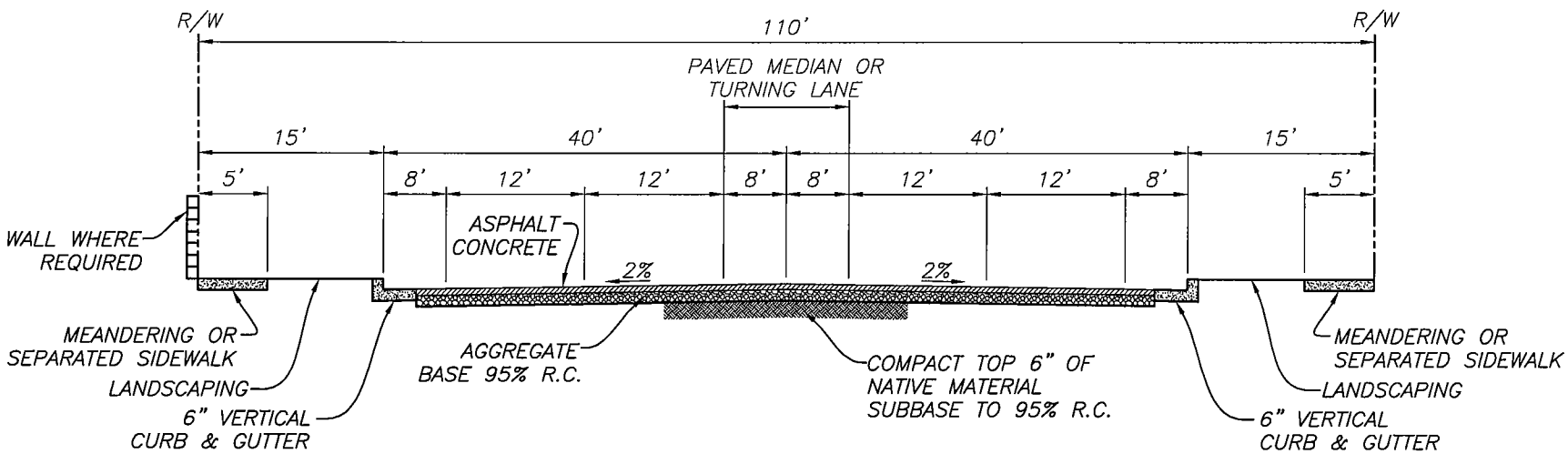

110' 5 LANE ARTERIAL STREET

Feb 13, 2003 – 4:36pm
\\Server_1\D\Library\Details\City of Patterson\02-20-02 DETAILS\3 – F.dwg

CITY OF PATTERSON IMPROVEMENT STANDARDS

4 LANE MAJOR ARTERIAL STREET SECTION

APPROVED BY:

DATE: 8-3-04

DRAWING NO. 3 - F

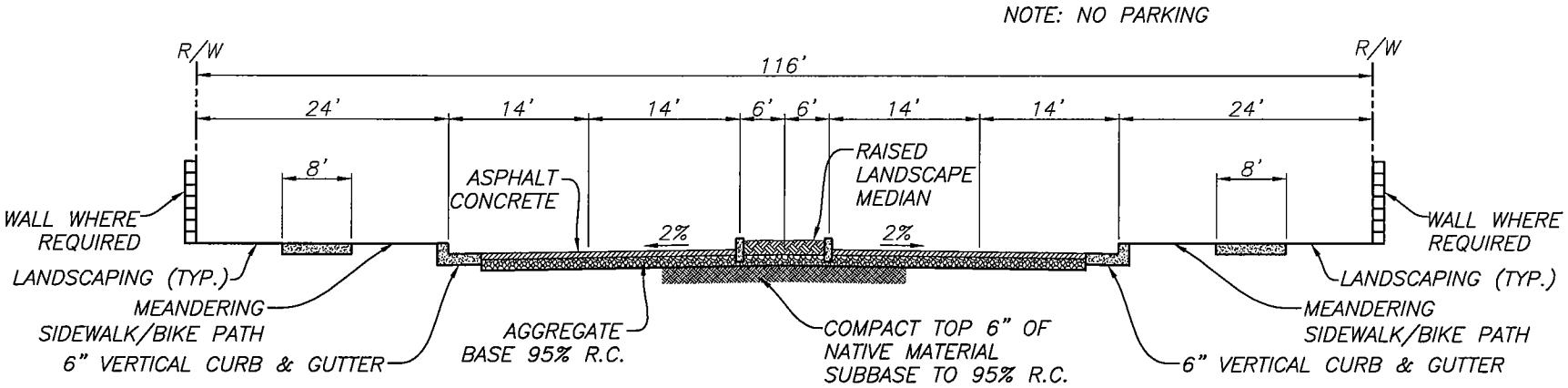

4 LANE ARTERIAL MAJOR STREET

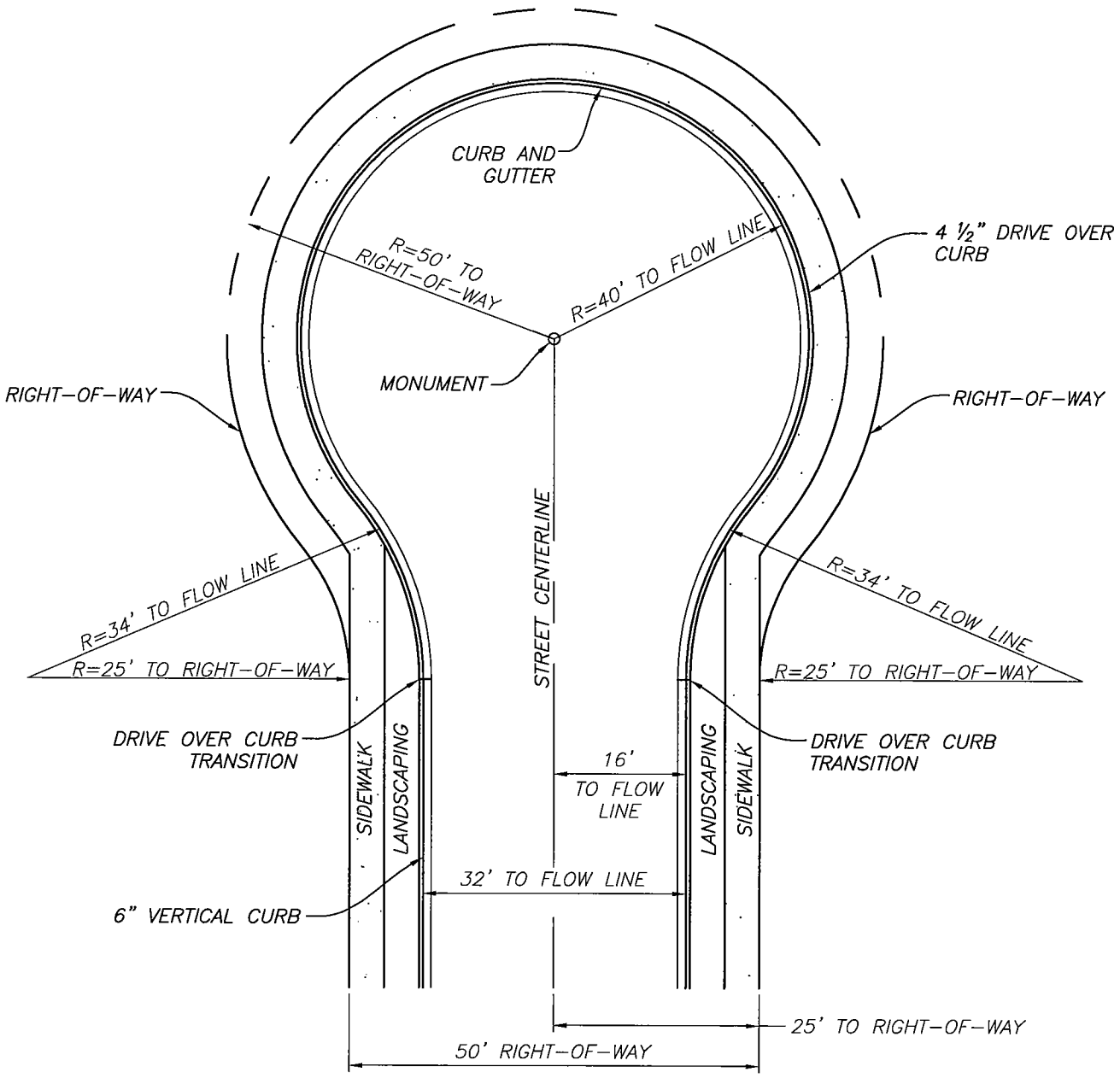

CITY OF PATTERSON IMPROVEMENT STANDARDS

CUL-DE-SAC GEOMETRY

APPROVED BY: Ignacio Lopez DATE: 8-3-04

DRAWING NO. 3 - G

Feb 13, 2003 - 4:36pm
\\Server_1\D\Library\Details\City of Patterson\02-20-02 DETAILS\3 - G.dwg

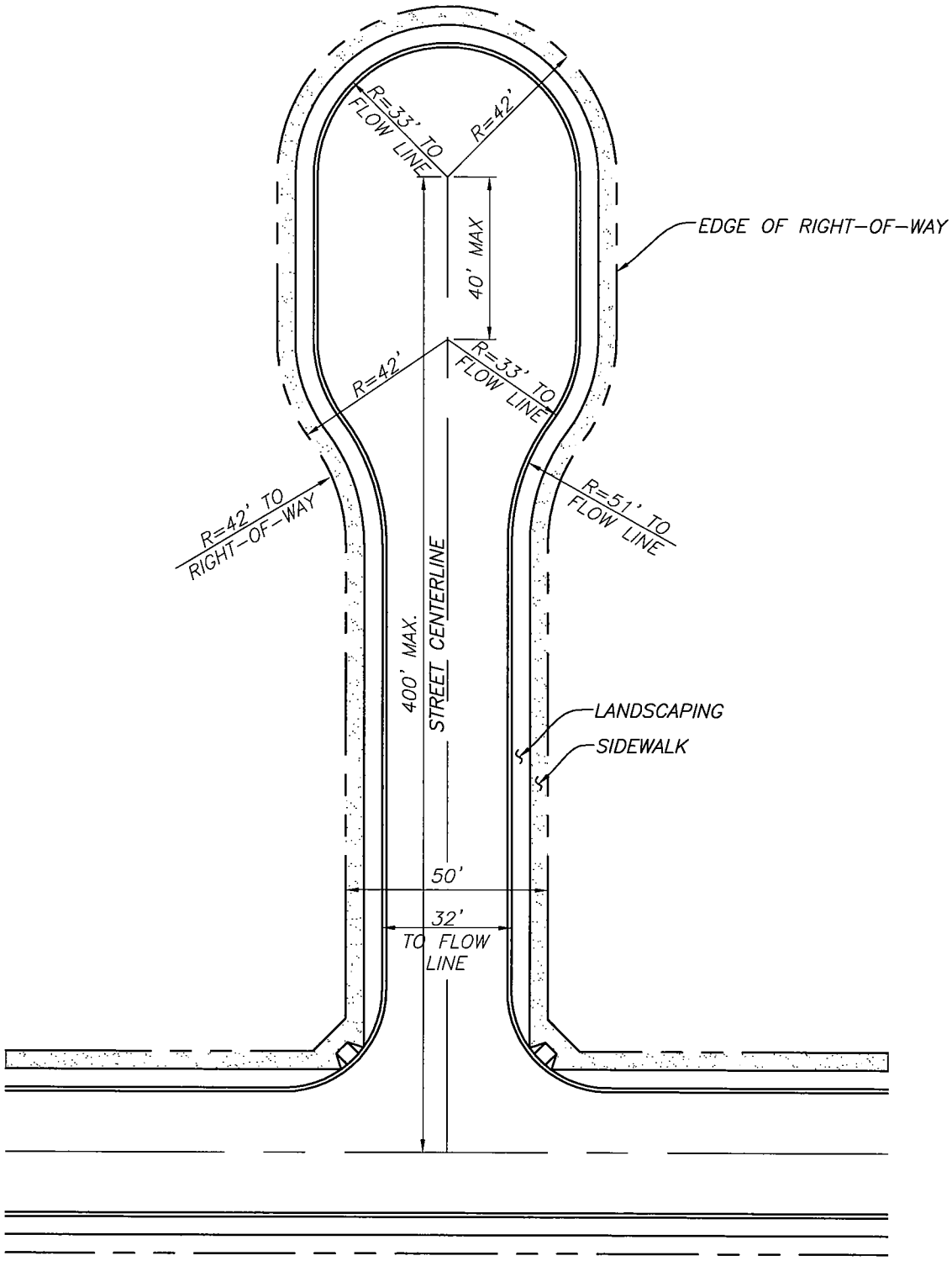

CITY OF PATTERSON IMPROVEMENT STANDARDS

CUL-DE-SAC ELONGATED

APPROVED BY: Ignacio Lopez

DATE: 8-3-04

DRAWING NO. 3 - H

Feb 13, 2003 - 4:37pm
\\Server_1\D\Library\Details\City of Patterson\02-20-02 DETAILS\3 - H.dwg

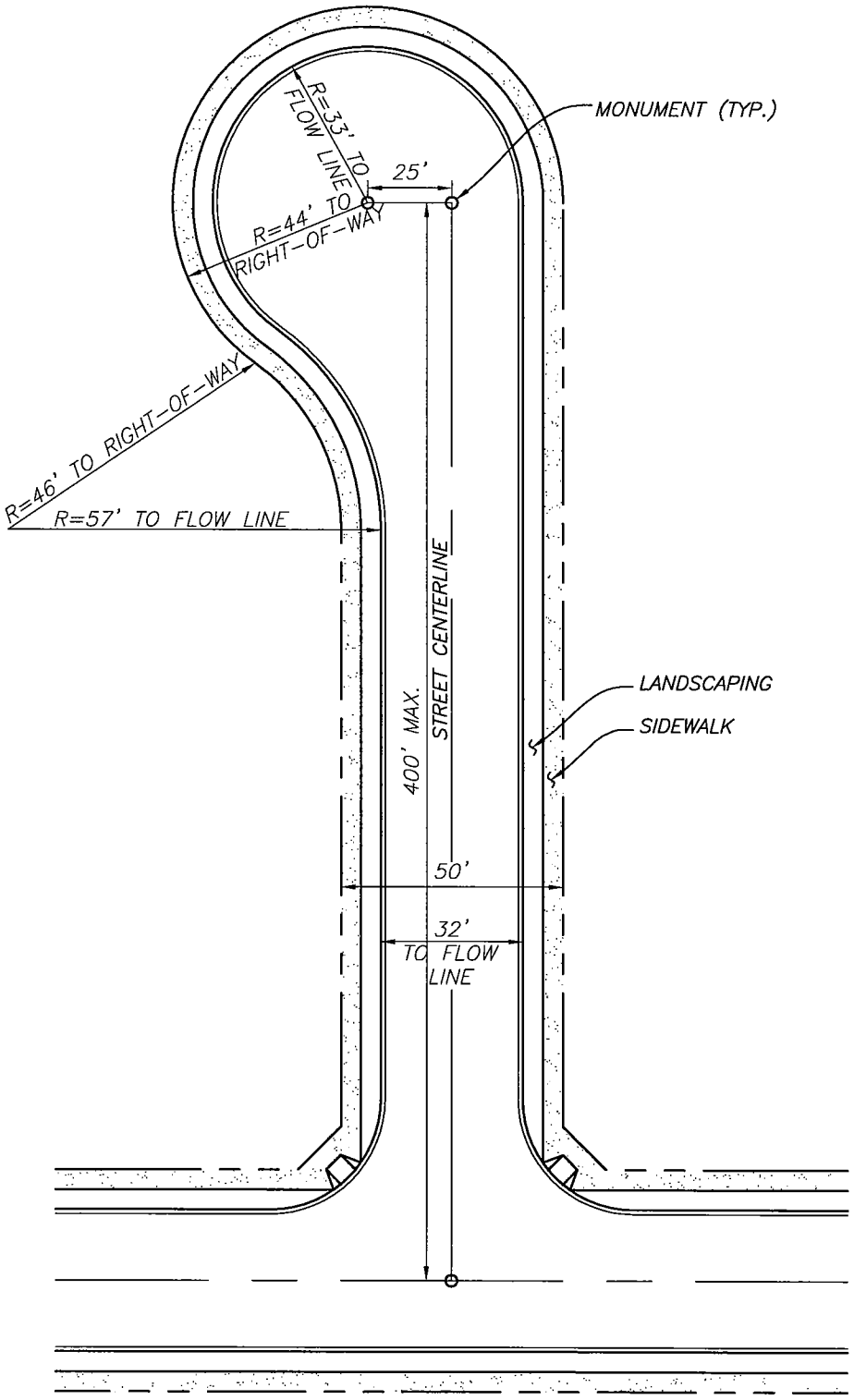

CITY OF PATTERSON IMPROVEMENT STANDARDS

CITY OF PATTERSON INCORPORATED 1919

CUL-DE-SAC TANGENT ONE SIDE

APPROVED BY: Ignacio Lopez DATE: 8-3-04

DRAWING NO. 3 - 1

Feb 13, 2003 - 4:37pm \\Server_1\D\Library\Details\City of Patterson\02-20-02 DETAILS\3 - 1.dwg

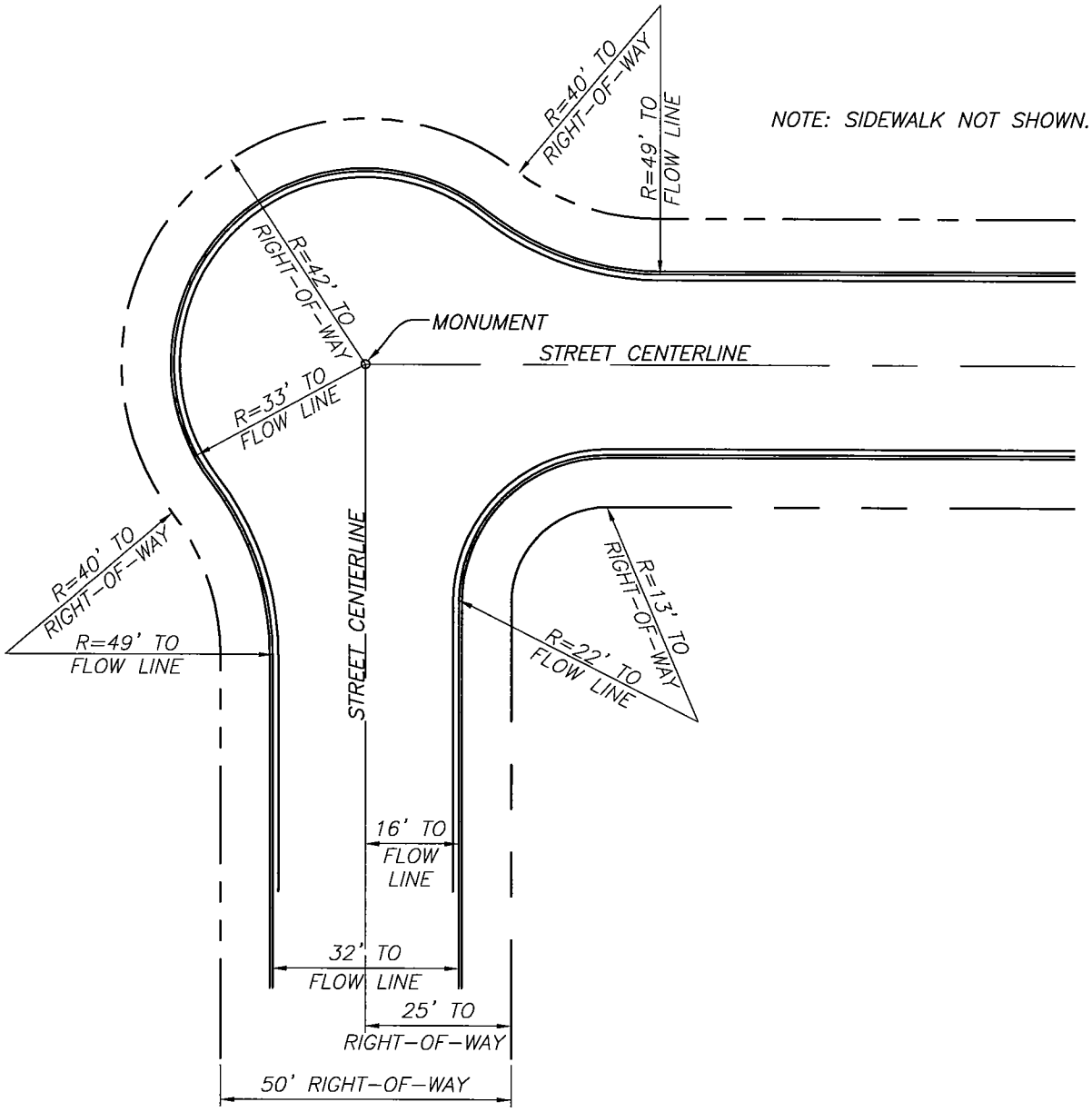

CITY OF PATTERSON IMPROVEMENT STANDARDS

INTESECTION BULB GEOMETRY

APPROVED BY: Ignacio Lopez

DATE: 8-3-04

DRAWING NO. 3 - J

Feb 13, 2003 - 4:37pm
\\Server_1\D\Library\Details\City of Patterson\02-20-02 DETAILS\3 - J.dwg

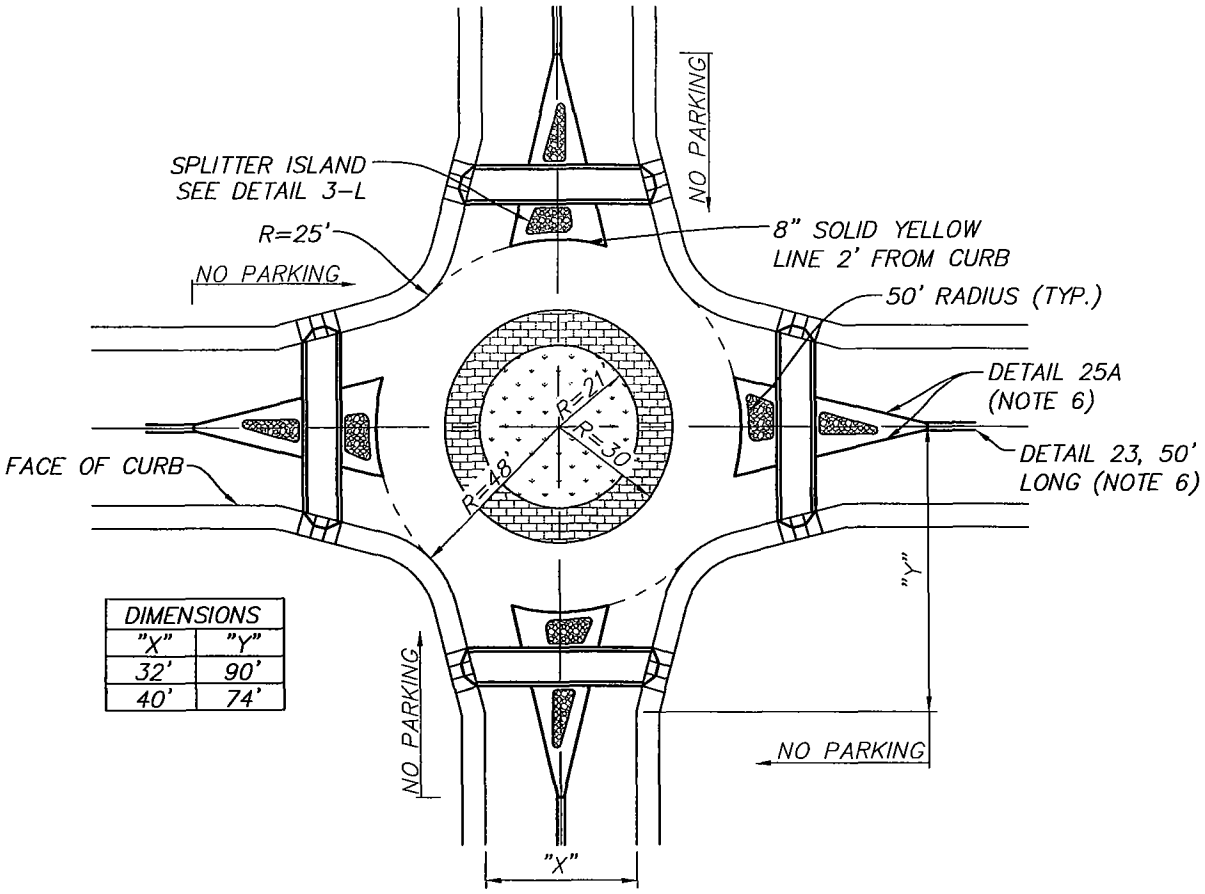

DIMENSIONS	
"X"	"Y"
32'	90'
40'	74'

PLAN

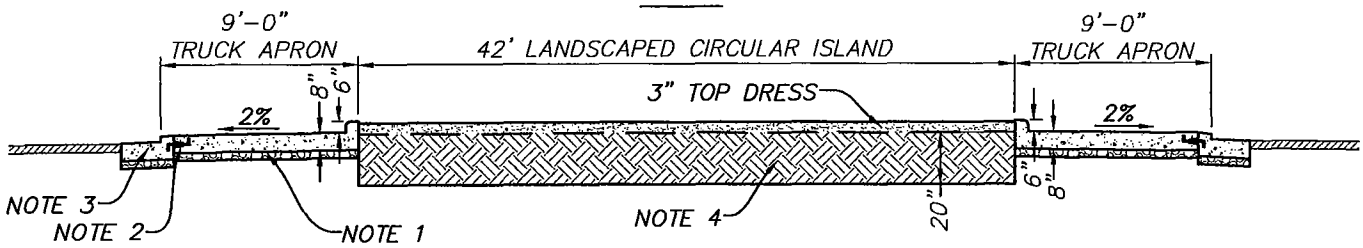

TYPICAL SECTION OF CIRCULAR ISLAND

NOTES:

1. STAMPED AND COLORED CONCRETE SHALL BE USED FOR TRUCK APRON. PATTERN AND COLOR TO BE APPROVED BY PLANNING DIRECTOR. REINFORCE WITH No. 4 BARS AT 12-INCH O.C. EACH WAY. PROVIDE 2-INCH DEEP RADIAL CONTRACTION JOINTS ON APPROXIMATE 8-FOOT CENTERS. (EQUAL SPACING)
2. No. 4 BARS 24-INCHES LONG, 24-INCH O.C. 12-INCH EMBEDMENT IN CURB AND GUTTER.
3. ROUNDABOUT CURB AND GUTTER, SEE DRAWING No. 3-L.
4. REMOVE EXISTING SOIL AND REPLACE WITH TOP SOIL APPROVED BY PUBLIC WORKS DIRECTOR. ALLOW FOR 3-INCH TOP DRESS AND 1-INCH OF FREEBOARD AT CURB.
5. INSTALL TYPE H REFLECTORS AROUND CIRCULAR ISLAND ON APPROXIMATELY 3-FOOT CENTERS.
6. STRIPING AND REFLECTOR DESIGNATION IS PER STATE STANDARDS.

CITY OF PATTERSON IMPROVEMENT STANDARDS

CITY OF PATTERSON INCORPORATED 1918

TYPICAL ROUNDABOUT

APPROVED BY: Ignacio Torres DATE: 7-20-04

DRAWING NO. 3 - K

Jul 26, 2004 - 10:22am
\\Server_1\D\Library\Details\City of Patterson\3 - K.dwg

NOTES:

1. STAMPED AND COLORED CONCRETE PATTERN AND COLOR AS APPROVED BY THE PLANNING DIRECTOR.
2. THERMOPLASTIC CROSSWALK MARKING. (12 INCHES WIDE – 8 FEET CLEAR BETWEEN STRIPES.)
3. STRIPING AND REFLECTOR DESIGNATION IS PER STATE STANDARDS.

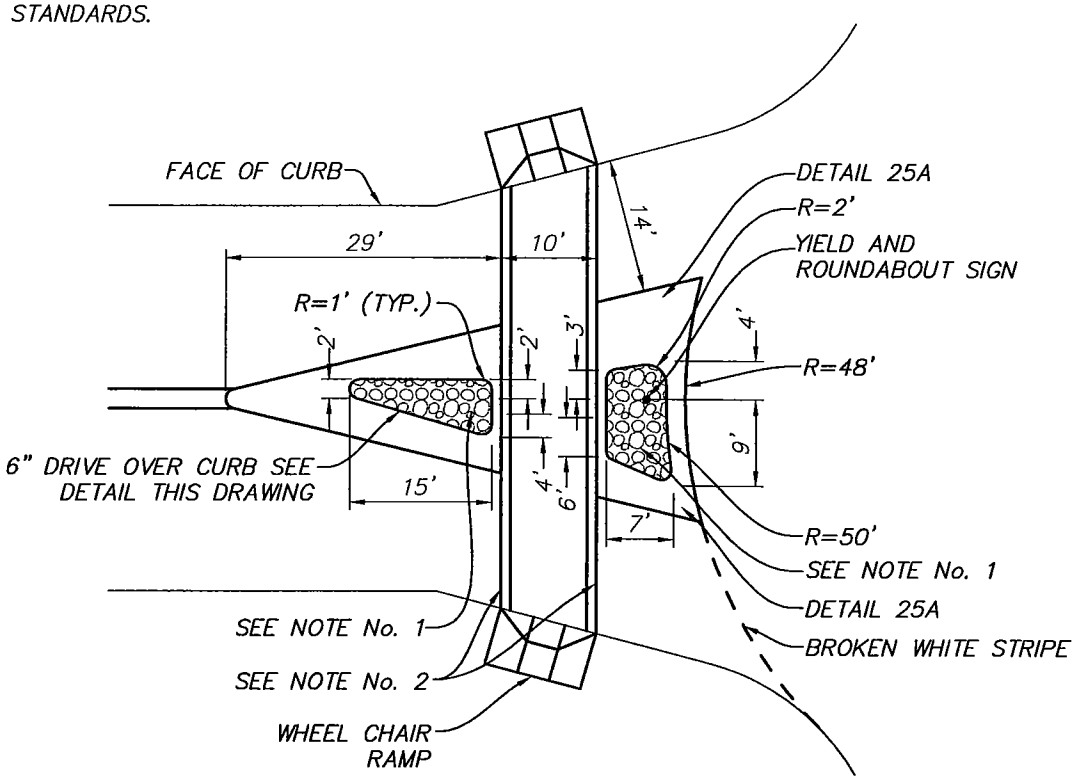

SPLITTER ISLAND DETAIL

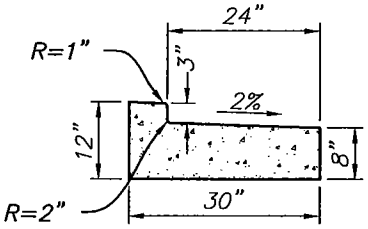

COMBINATION CURB AND GUTTER

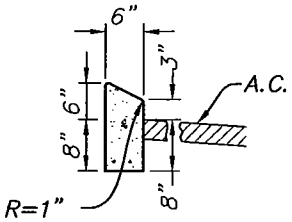

6" CURB

CITY OF PATTERSON IMPROVEMENT STANDARDS

ROUNDABOUT DETAILS

APPROVED BY: Ignacio Lopez DATE: 7-20-04

DRAWING NO. 3 - L

Jul 26, 2004 – 2:27pm
\\Server_1\D\Library\Details\City of Patterson\3 – L.dwg

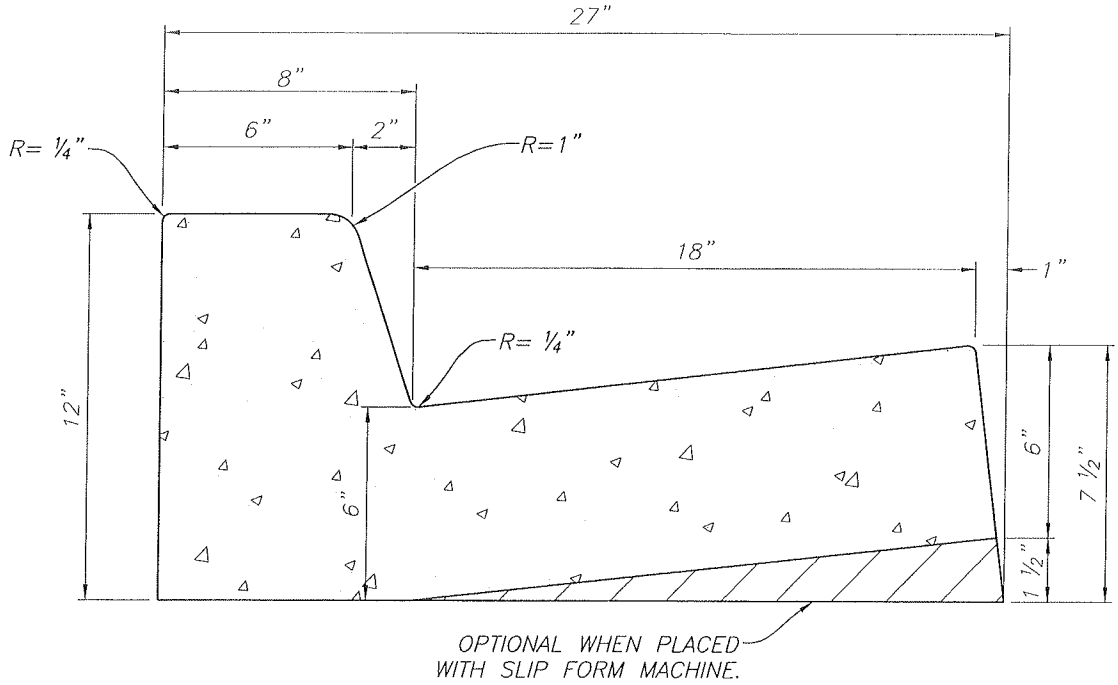

VERTICAL CURB AND GUTTER

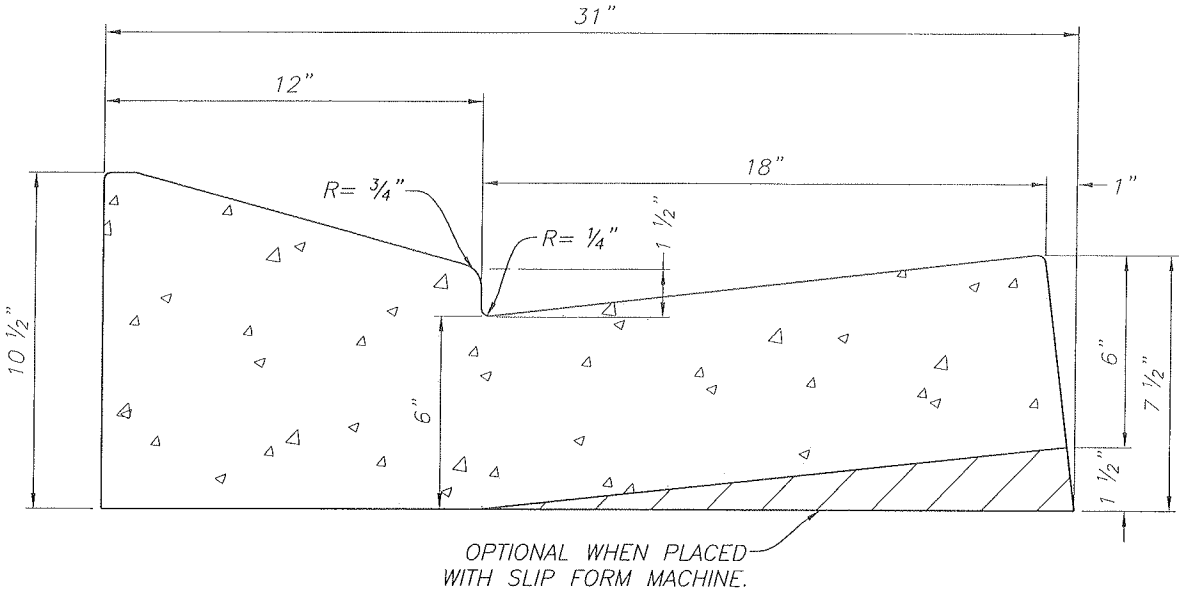

DRIVE-OVER CURB AND GUTTER

NOTES:

PLACE 4 INCHES OF CLASS II AGGREGATE BASE COMPACTED TO 95% UNDERNEATH CURB AND GUTTER.

CITY OF PATTERSON IMPROVEMENT STANDARDS

6" VERTICAL CURB AND GUTTER AND 4 1/2" DRIVE-OVER CURB AND GUTTER

APPROVED BY Michael Willett DATE: 4-15-08

DRAWING NO. 3 - M

Mar 20, 2008 - n
\\bfilesrv\Stoddard_ J\Library\Details\City of Patterson\3 - M.dwg

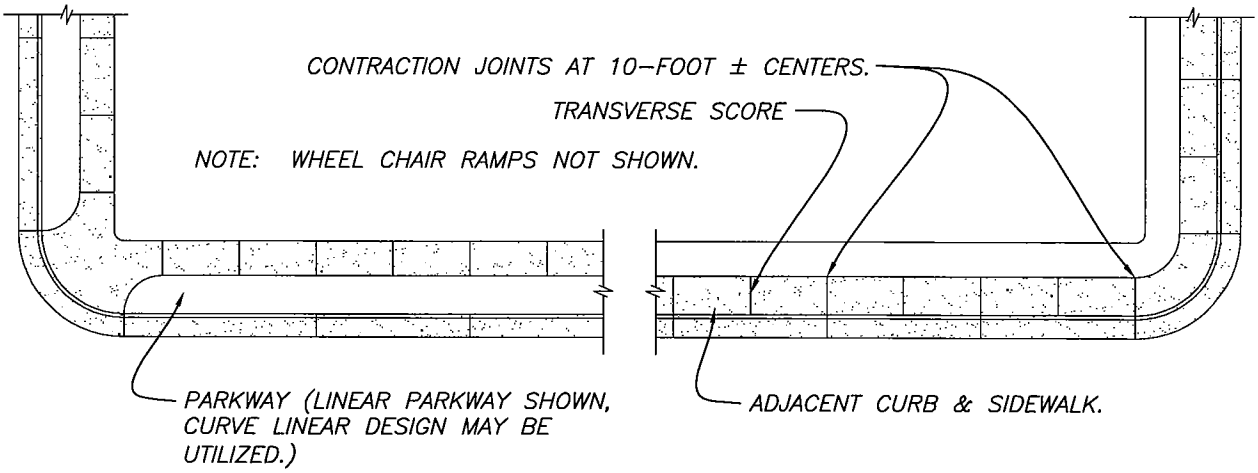

TYPICAL SIDEWALK PLAN

NOTES:

1. EDGES TO HAVE 3/4-INCH RADIUS.
2. TRANSVERSE SCORES NOT LESS THAN 3/8-INCH DEEP EXCEPT AT CONTRACTION JOINTS WHICH SHALL BE 1-1/2-INCHES DEEP.
3. CONTRACTION JOINTS MAY BE SAWED.
4. SIDEWALK TO BE REMOVED SHALL BE SAWCUT. CONCRETE SHALL BE REMOVED TO THE NEAREST TRAVERSE SCORE OR CONTRACTION JOINT.
5. CITY SHALL APPROVE SUBGRADE PREPARATION PRIOR TO PLACEMENT OF CONCRETE.

CITY OF PATTERSON IMPROVEMENT STANDARDS

CITY OF PATTERSON INCORPORATED 1919

SIDEWALK CONSTRUCTION

APPROVED BY: Ignacio Lopez DATE: 8-3-04

DRAWING NO. 3 - N

Feb 13, 2003 - 4:37pm \\Server_1\D\Library\Details\City of Patterson\02-20-02 DETAILS\3 - N.dwg

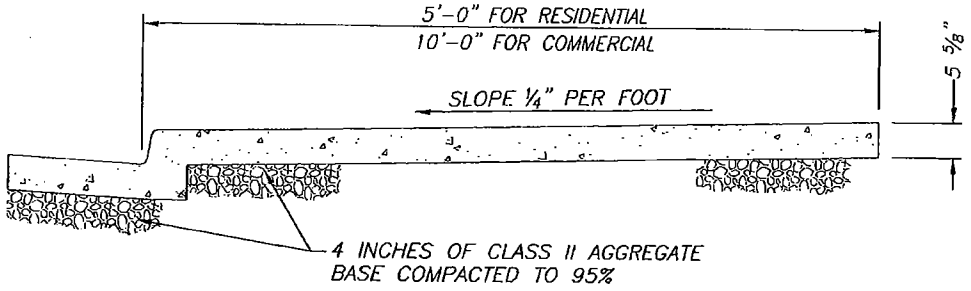

ATTACHED CURB AND SIDEWALK

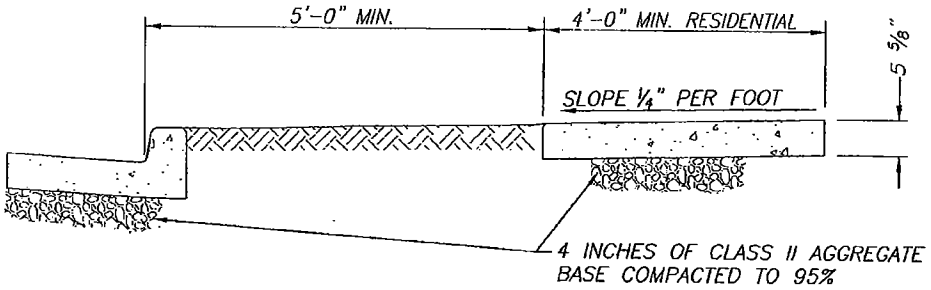

SEPARATED CURB AND SIDEWALK

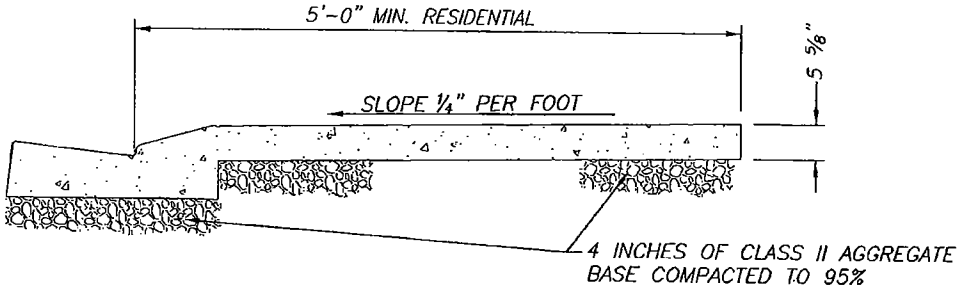

ROLLOVER CURB AND SIDEWALK

CITY OF PATTERSON IMPROVEMENT STANDARDS

CITY OF PATTERSON INCORPORATED 1919

SIDEWALK SECTIONS

APPROVED BY: Michael Willett DATE: 2-3-09

DRAWING NO. 3-O

Feb 18, 2008 - 2:04pm
\\bfilesrv\Stoddard\LB15\Library\Details\City of Patterson\3 - 0.dwg

CITY OF PATTERSON IMPROVEMENT STANDARDS

VALLEY GUTTER

APPROVED BY: Michael Wilson 4-15-08

DRAWING NO. 3 - P

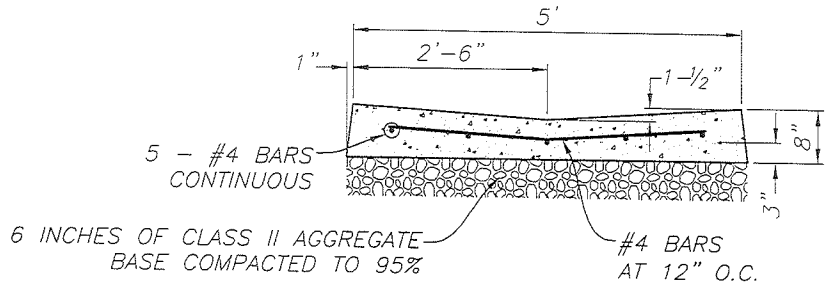

SECTION A-A

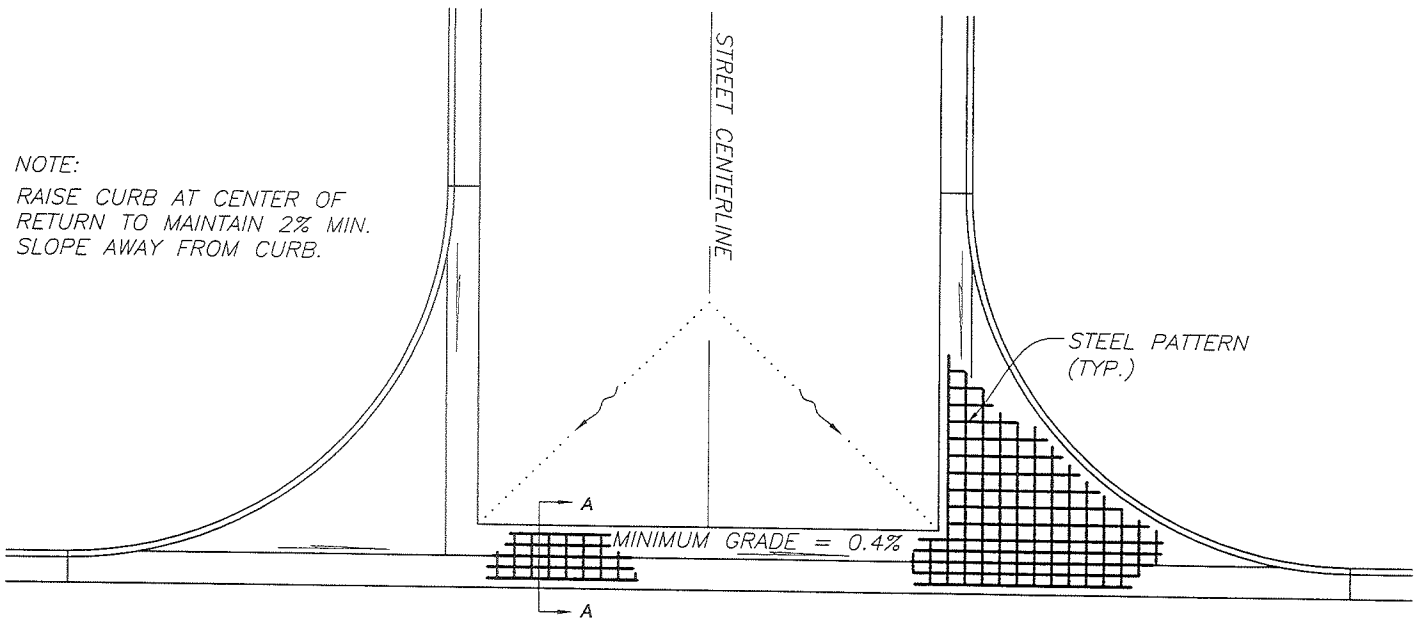

NOTE:
RAISE CURB AT CENTER OF RETURN TO MAINTAIN 2% MIN. SLOPE AWAY FROM CURB.

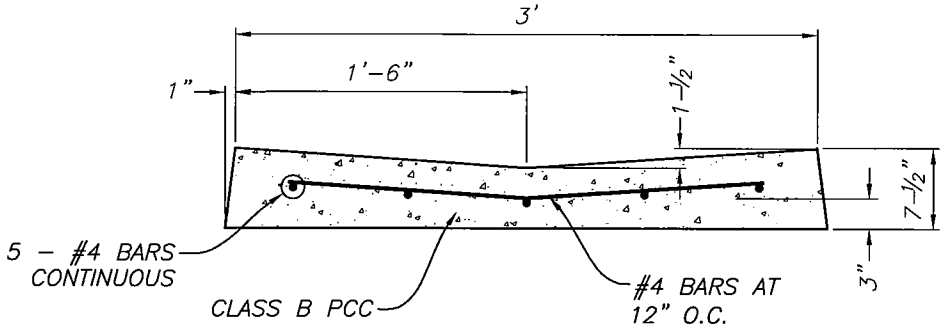

CONCRETE VALLEY GUTTER DETAIL

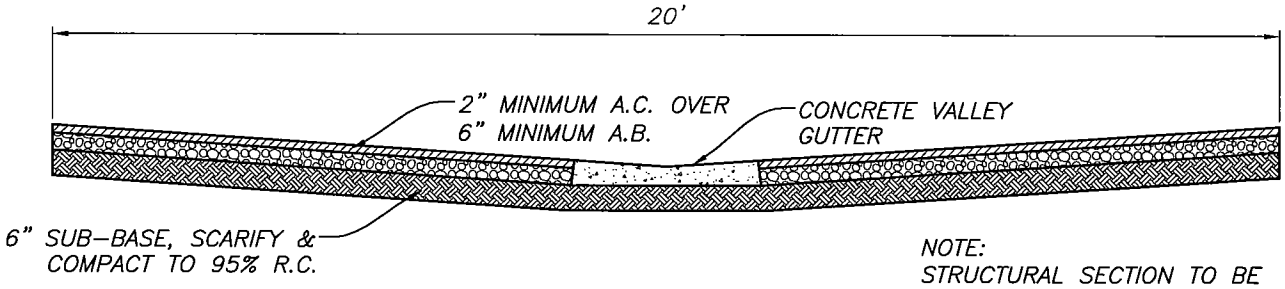

ALLEY INTERSECTION

NOTE:
STRUCTURAL SECTION TO BE DESIGNED ACCORDING TO SECTION 3.3 OF THESE STANDARDS

NOTE:
CONSTRUCT APPROACH PER COMMERCIAL DRIVEWAY STANDARD.

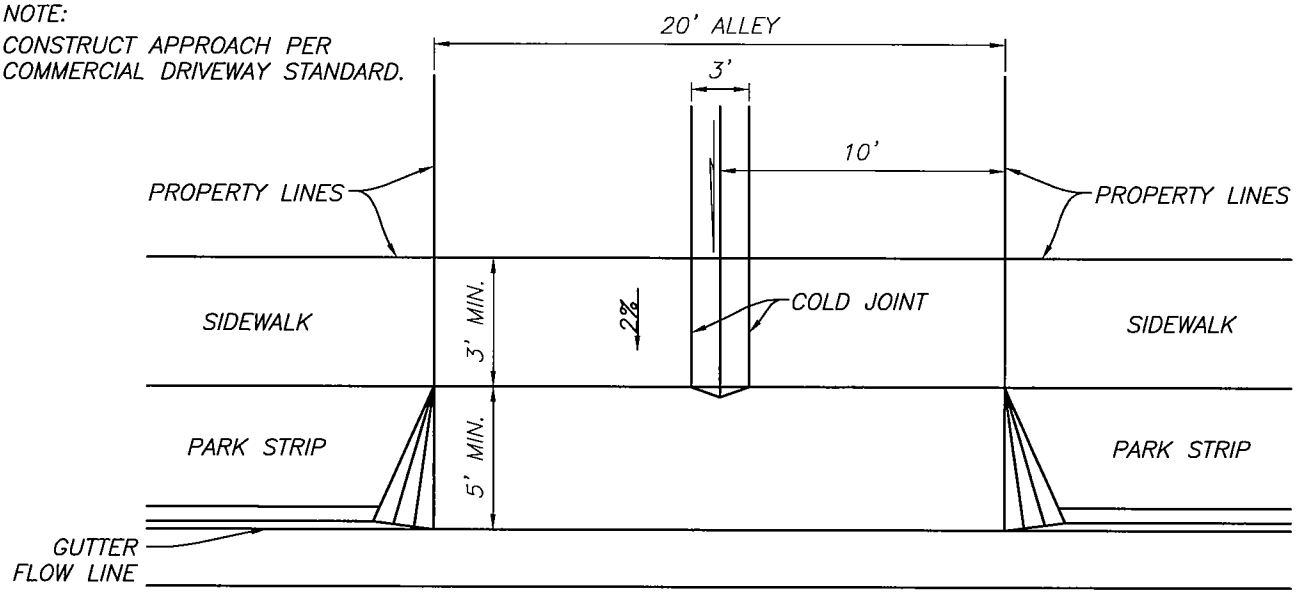

PLAN

CITY OF PATTERSON IMPROVEMENT STANDARDS

ALLEY APPROACH

APPROVED BY: Ignacio Lopez DATE: 8-3-04

DRAWING NO. 3 - Q

Feb 13, 2003 - 4:37pm \\Server_1\D\Library\Details\City of Patterson\02-20-02 DETAILS\3 - Q.dwg

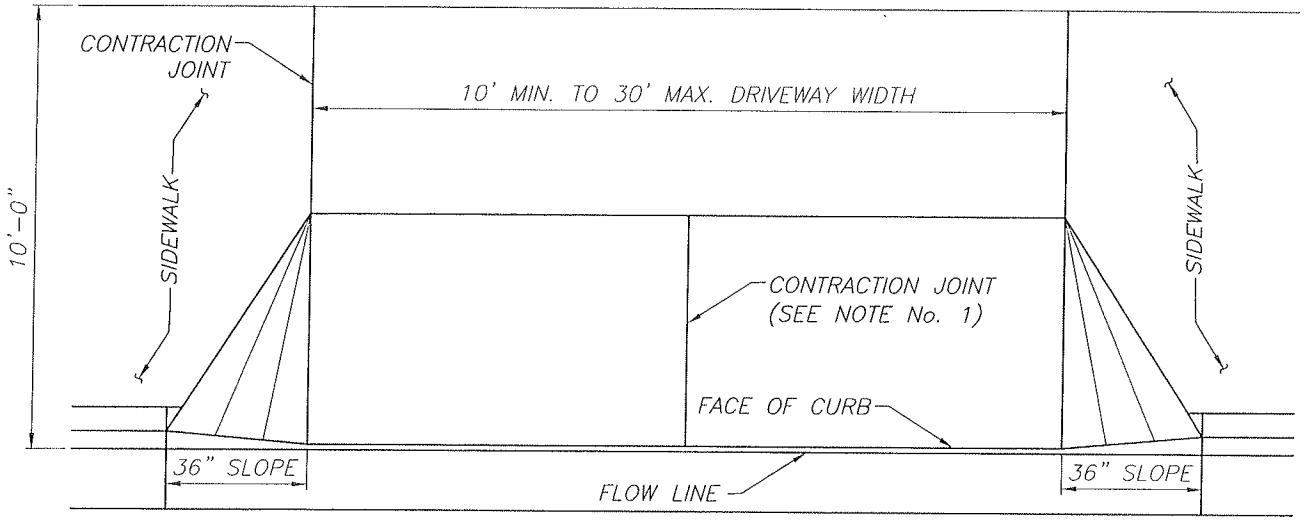

PLAN

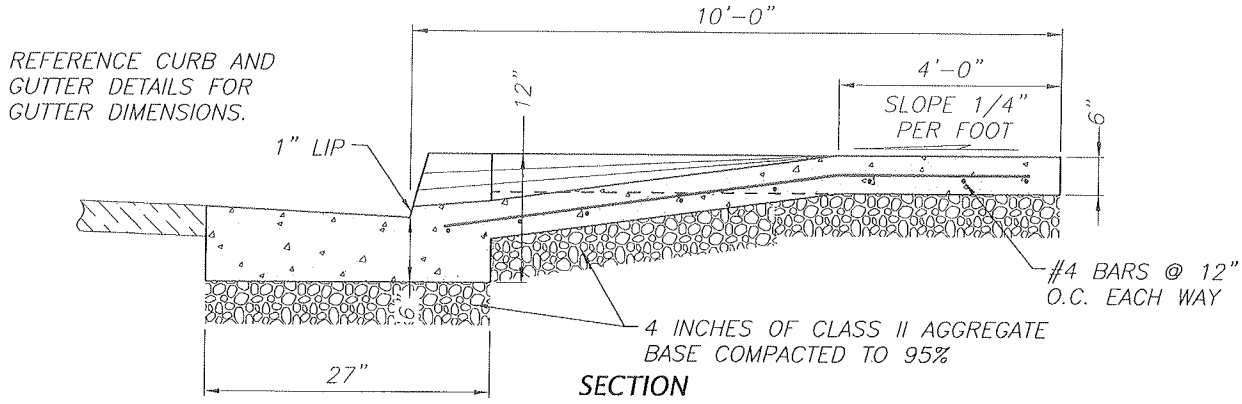

SECTION

NOTES:

1. CONTRACTION JOINT TO BE ADDED TO CENTER OF APPROACH IF IT IS OVER 20' WIDE.
2. DRIVEWAYS SHALL BE CONSTRUCTED OF CLASS 3 PORTLAND CEMENT CONCRETE.

CITY OF PATTERSON IMPROVEMENT STANDARDS

CITY OF PATTERSON INCORPORATED 1919

COMMERCIAL DRIVEWAY

APPROVED BY: Michael Willett 4-15-08

DRAWING NO. 3 - R

Mar 20, 2008 – S:\LB15\Library\Deta... ity of Patterson\3 – R.dwg

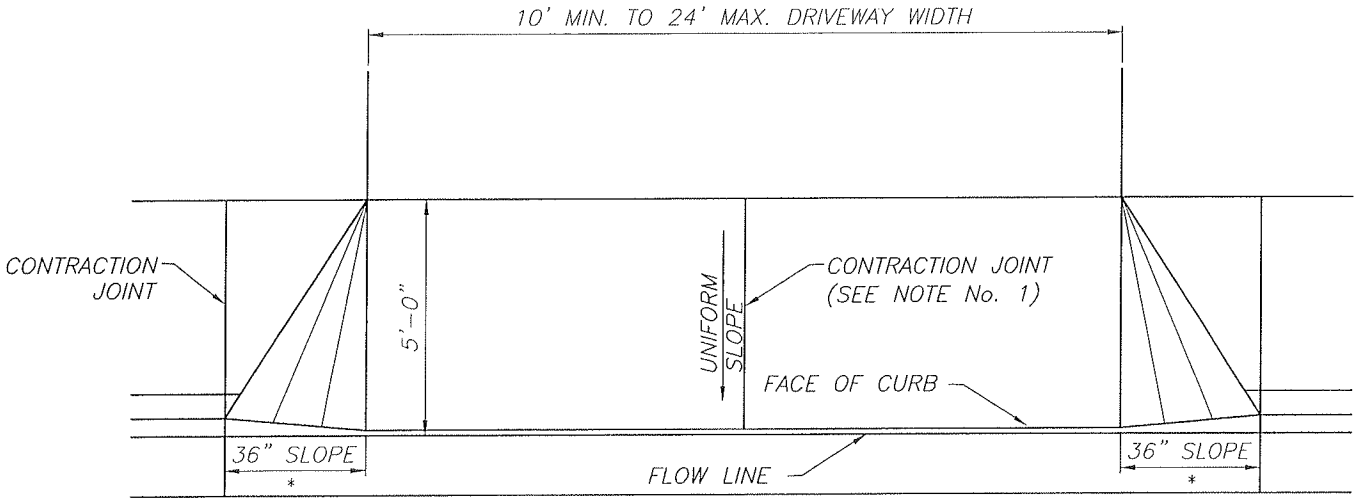

PLAN

* CAN BE REDUCED TO 24" WITH APPROVAL OF PUBLIC WORKS DIRECTOR.

REFERENCE CURB AND GUTTER DETAILS FOR GUTTER DIMENSIONS.

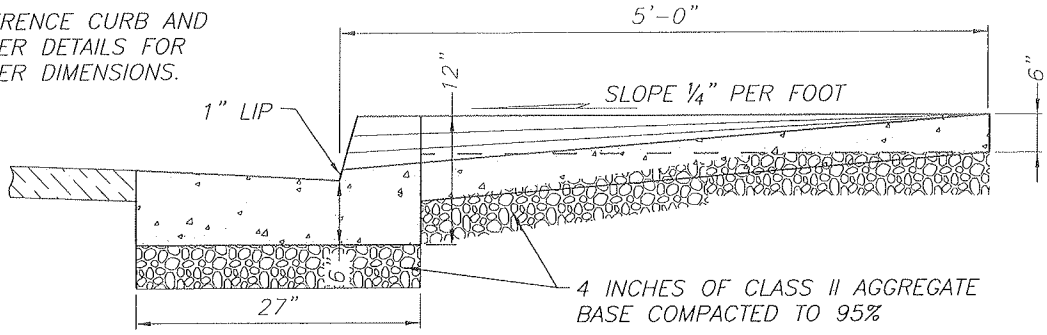

SECTION

NOTES:

1. CONTRACTION JOINT TO BE ADDED TO CENTER OF APPROACH IF IT IS OVER 20 FEET WIDE.
2. DRIVEWAYS SHALL BE CONSTRUCTED OF CLASS 3 PORTLAND CEMENT CONCRETE.

CITY OF PATTERSON IMPROVEMENT STANDARDS

RESIDENTIAL DRIVEWAY
(CURB AND GUTTER ATTACHED)

APPROVED BY: Michael Willett DATE: 4-15-08

DRAWING NO. 3 - S

Mar 20, 2008 – S:\LB15\Library\Details\City of Patterson\3 – S.dwg

NOTES:

DETAIL SHOWN FOR ATTACHED CURB AND SIDEWALK. SIMILAR FOR SEPARATED CURB AND SIDEWALK.

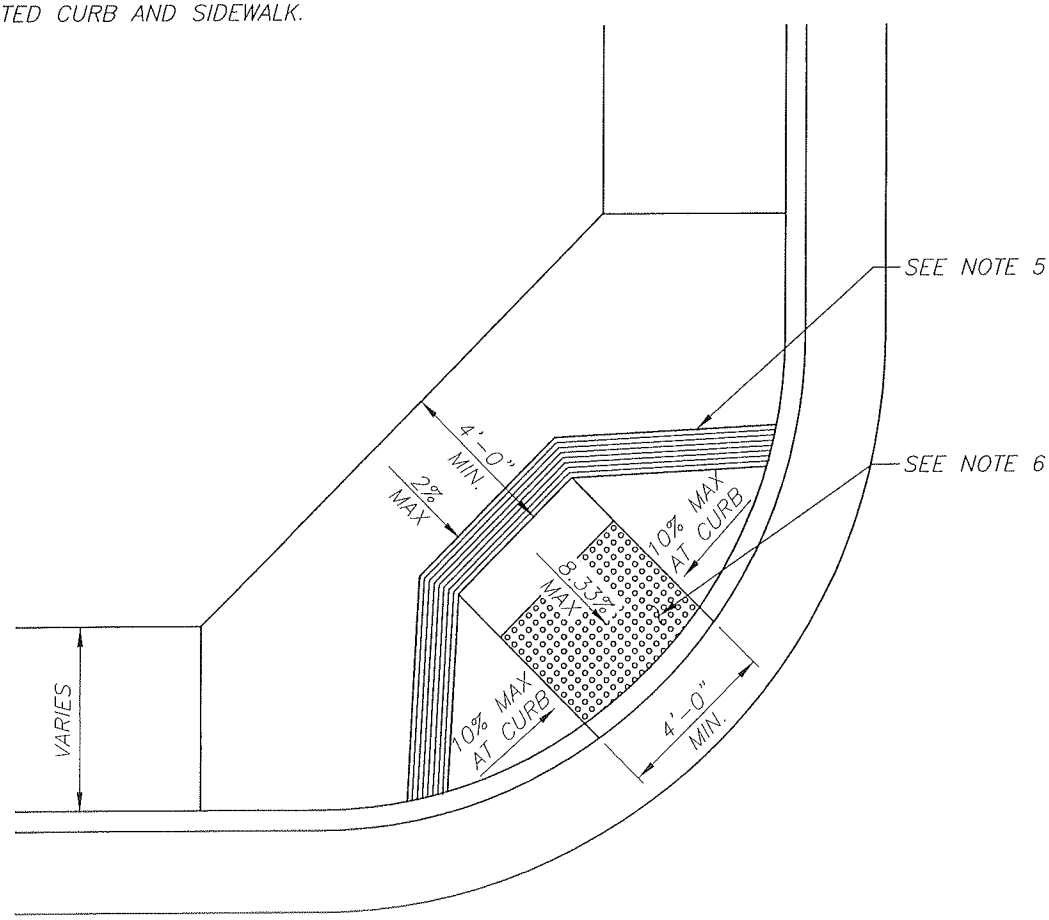

NOTES:

1. WHEEL CHAIR RAMP TYPE 1 IS FOR NEW CONSTRUCTION.
2. SIDEWALK AND WHEEL CHAIR RAMP IN RETURN AREA SHALL BE 5 ½ INCHES THICK MINIMUM.
3. TOP OF CURB SHALL BE FLUSH WITH GUTTER FLOWLINE AT RAMP.
4. PLACE 4 INCHES OF CLASS II AGGREGATE BASE COMPACTED TO 95% UNDERNEATH RAMP.
5. THE CURB RAMP SHALL BE OUTLINED, AS SHOWN, WITH A 1 FOOT WIDE BORDER WITH 1/4-INCH WIDE GROOVES 3/4-INCH ON CENTER. GROOVES SHALL BE 1/4-INCH DEEP.
6. DETECTABLE WARNING SURFACE (TRUNCATED DOMES) THAT EXTEND THE FULL WIDTH AND 3 FEET DEEP ON THE RAMP. THE DETECTABLE WARNING SURFACE SHALL MEET THE LATEST REQUIREMENTS OF THE AMERICANS WITH DISABILITIES ACT (ADA). THE EDGE OF THE DETECTABLE WARNING SURFACE NEAREST THE STREET SHALL BE BETWEEN 6 INCHES AND 9 INCHES OF THE GUTTER FLOWLINE.

CITY OF PATTERSON IMPROVEMENT STANDARDS

CITY OF PATTERSON INCORPORATED 1919

WHEEL CHAIR RAMP - TYPE 1

APPROVED BY: Michael Willey 4-15-08

DRAWING NO. 3 - T

Mar 20, 2008 - S:\LB15\Library\Details\City of Patterson\3 - T.dwg

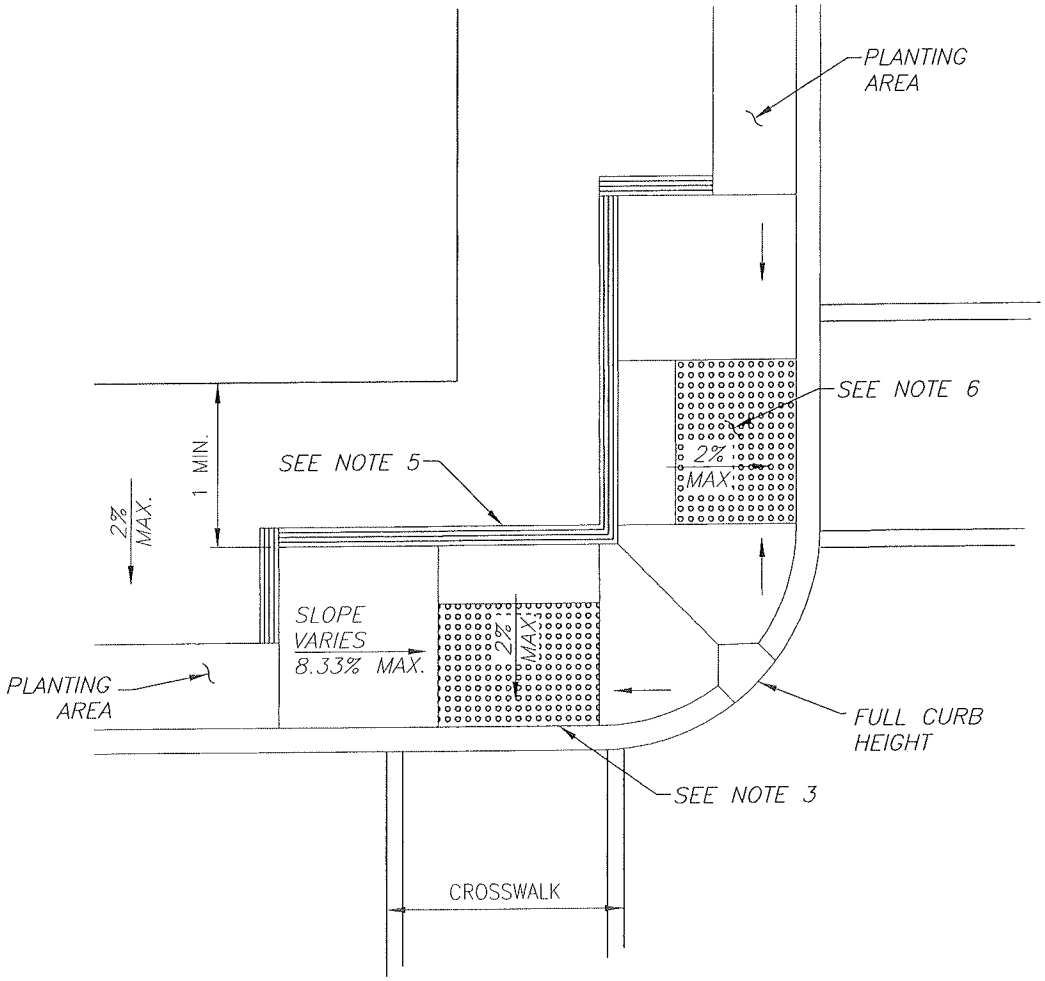

NOTES:

1. WHEEL CHAIR RAMP DESIGN IS FOR RETROFIT ONLY.
2. WHEEL CHAIR RAMP SHALL BE 5 ½ INCHES THICK MINIMUM.
3. TOP OF CURB SHALL BE FLUSH WITH GUTTER FLOW LINE AT RAMP.
4. PLACE 4 INCHES OF CLASS II AGGREGATE BASE COMPACTED TO 95% UNDERNEATH RAMP.
5. THE CURB RAMP SHALL BE OUTLINED, AS SHOWN, WITH A 1 FOOT WIDE BORDER WITH 1/4-INCH WIDE GROOVES ON CENTER. GROOVES SHALL BE 1/4-INCH DEEP.
6. DETECTABLE WARNING SURFACE (TRUNCATED DOMES) THAT EXTEND THE FULL WIDTH AND 3 FEET DEEP ON THE RAMP. THE DETECTABLE WARNING SURFACE SHALL MEET THE LATEST REQUIREMENTS OF THE AMERICANS WITH DISABILITIES ACT (ADA). THE EDGE OF THE DETECTABLE WARNING SURFACE NEAREST THE STREET SHALL BE BETWEEN 6 INCHES AND 9 INCHES OF THE GUTTER FLOWLINE.

CITY OF PATTERSON IMPROVEMENT STANDARDS

CITY OF PATTERSON INCORPORATED 1919

WHEEL CHAIR RAMP - TYPE 2

APPROVED BY: Michael Willett DATE: 4-15-08

DRAWING NO. 3 - U

Mar 20, 2008 – n
S:\LB15\Library\Details\City of Patterson\3 – U.dwg

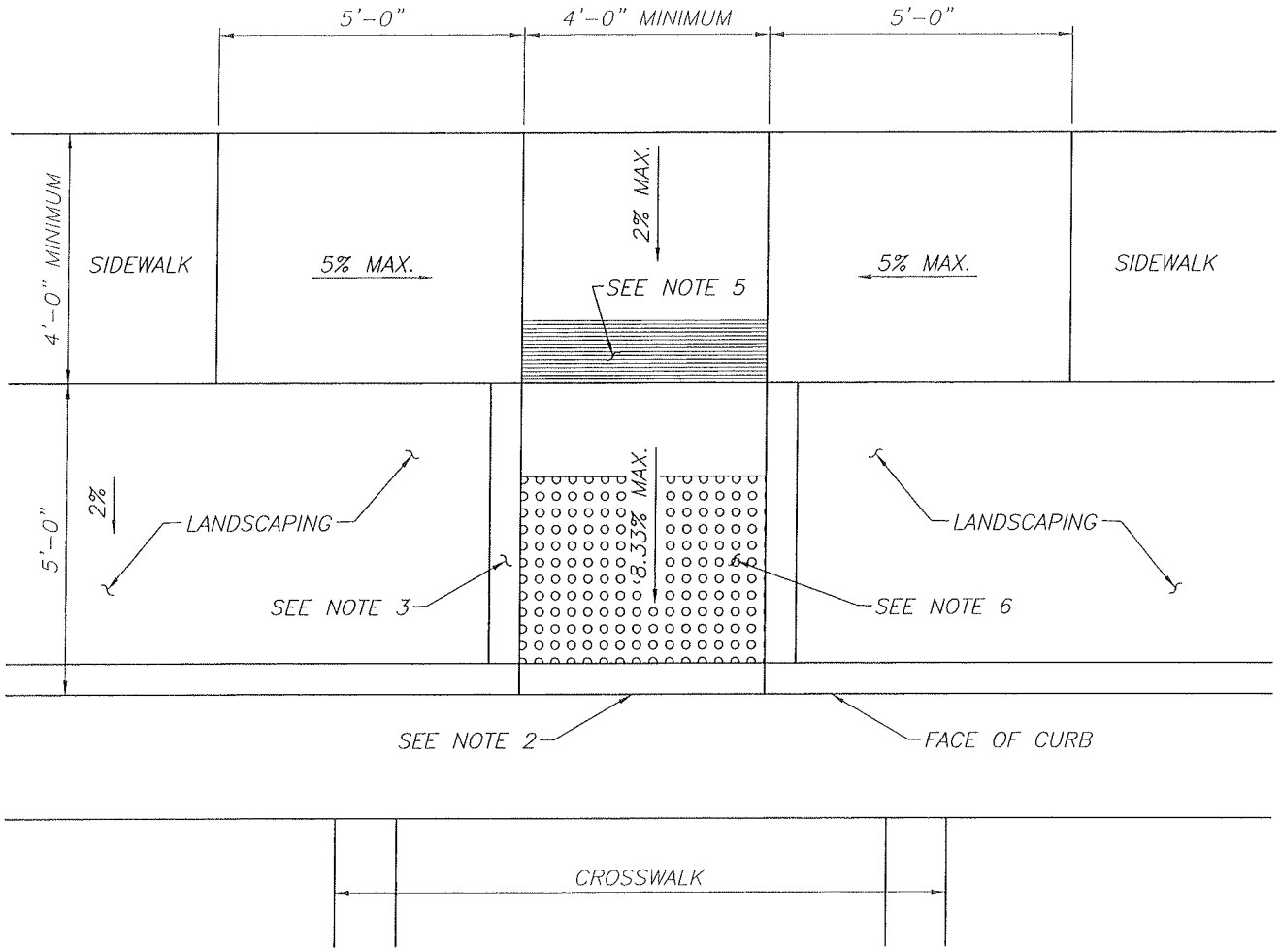

NOTES:

1. WHEEL CHAIR RAMP TYPE 3 IS FOR NEW CONSTRUCTION. RAMP SHALL BE 5 ½ INCHES THICK MINIMUM.
2. TOP OF CURB SHALL BE FLUSH WITH GUTTER FLOW LINE AT RAMP.
3. 6-INCH WIDE BY 12-INCH DEEP CURB. TOP OF CURB SHALL BE FLUSH WITH RAMP LANDING AT SIDEWALK AND 6 INCHES ABOVE GUTTER FLOW LINE AT CURB AND GUTTER.
4. PLACE 4 INCHES OF CLASS II AGGREGATE BASE COMPACTED TO 95% UNDERNEATH RAMP.
5. THE CURB RAMP SHALL BE OUTLINED, AS SHOWN, WITH A 1 FOOT WIDE BORDER WITH 1/4-INCH WIDE GROOVES 3/4-INCH ON CENTER. GROOVES SHALL BE 1/4-INCH DEEP.
6. DETECTABLE WARNING SURFACE (TRUNCATED DOMES) THAT EXTEND THE FULL WIDTH AND 3 FEET DEEP ON THE RAMP. THE DETECTABLE WARNING SURFACE SHALL MEET THE LATEST REQUIREMENTS OF THE AMERICANS WITH DISABILITIES ACT (ADA). THE EDGE OF THE DETECTABLE WARNING SURFACE NEAREST THE STREET SHALL BE BETWEEN 6 INCHES AND 9 INCHES OF THE GUTTER FLOWLINE.

CITY OF PATTERSON IMPROVEMENT STANDARDS

CITY OF PATTERSON INCORPORATED 1919

WHEEL CHAIR RAMP - TYPE 3

APPROVED BY: Michael Wilson DATE 4-15-08

DRAWING NO. 3 - V

Mar 20, 2008 - n
S:\LB15\Library\Details\City of Patterson\3 - V.dwg

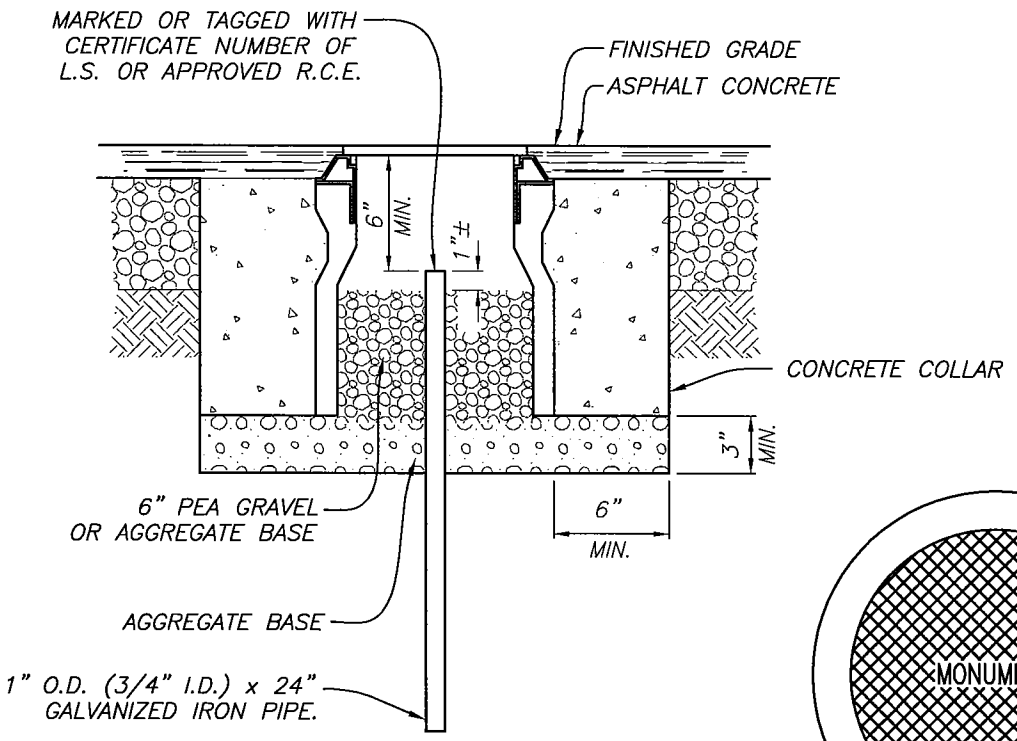

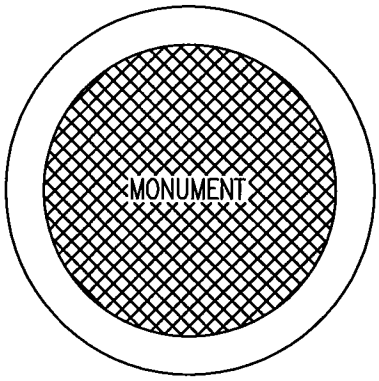

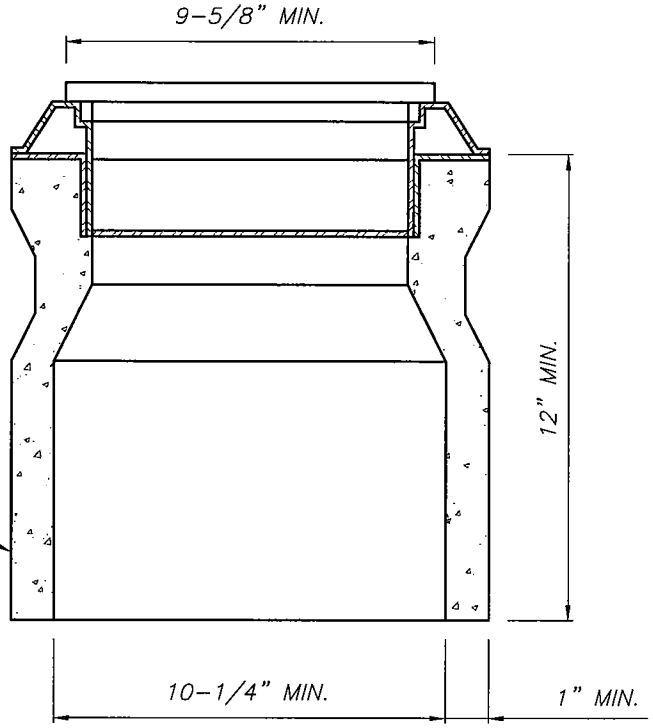

NOTE:

1. FOR INSTALLATION INSIDE STREET SECTIONS ONLY.

CHRISTY G5 OR BROOKS 3RT TRAFFIC BOX.

CITY OF PATTERSON IMPROVEMENT STANDARDS

SURVEY MONUMENT AND WELL

APPROVED BY: Ignacio Lopez

DATE: 8-3-04

DRAWING NO. 3 - W

Feb 13, 2003 - 4:37pm \\Server_1\D\Library\Details\City of Patterson\02-20-02 DETAILS\3 - W.dwg

NOTES:

1. PLACE STAKE SUCH AS TO PREVENT BRANCHES FROM RUBBING ON IT.
2. NEW TREES SHALL BE 15-GALLON AND SHALL HAVE A 1-INCH MINIMUM CALIPER 12 INCHES FROM GRADE LEVEL (IF A 15-GALLON SIZE IS NOT AVAILABLE MEETING THE CALIPER REQUIREMENT, USE A 24-INCH BOX SIZE).
3. EXCAVATE A HOLE A MINIMUM OF 4' x 4' x 3' DEEP FOR PLANTING OF TREE.
4. REMOVE NURSERY STAKE UPON COMPLETION OF PLANTING.
5. R2 METAL STAKE AS MANUFACTURED BY J.P. PARTNERS OR ALTERNATE AS APPROVED BY PUBLIC WORKS DIRECTOR. INSTALL PER MANUFACTURER'S RECOMMENDATIONS. STAKE TO BE INSTALLED ON PREVAILING WIND SIDE.

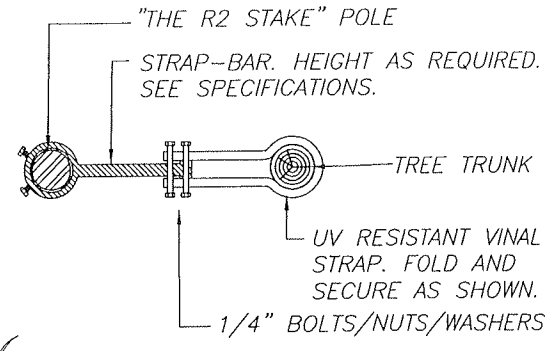

DETAIL

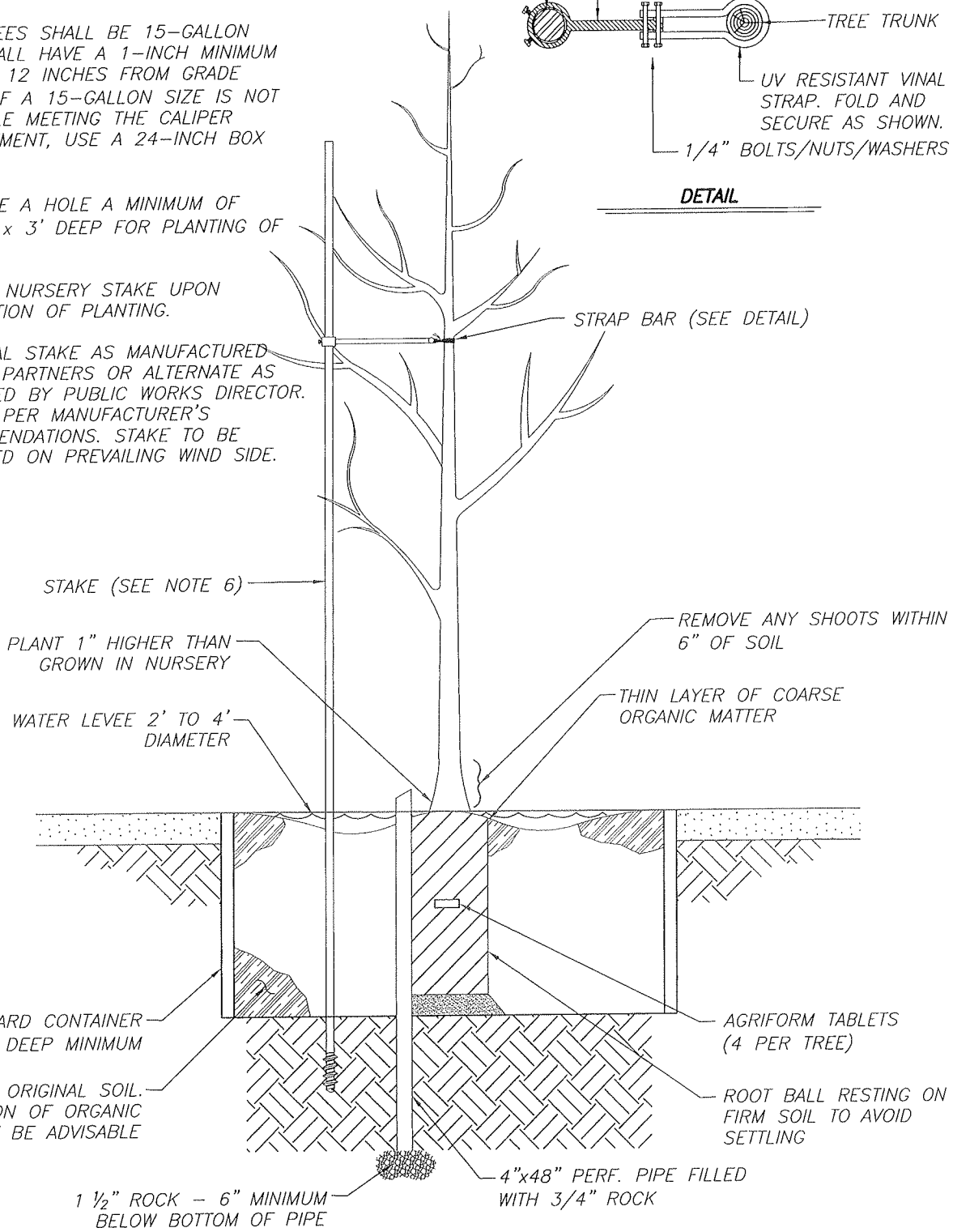

CITY OF PATTERSON IMPROVEMENT STANDARDS

TREE PLANTING

APPROVED BY: Michael Wilson DATE: 4-15-08

DRAWING NO. 3 - X

Mar 20, 2008 - S:\LB15\Library\Details\City of Patterson\3 - X.dwg

NOTES:

1. STAKES AND PERFORATED WATERING PIPE NOT SHOWN.
2. SEE DRAWING 3-X FOR ADDITIONAL PLANTING DETAILS.
3. WHEN REQUIRED BY THE PUBLIC WORKS DIRECTOR, INSTALL ROOT BARRIER ON ALL FOUR SIDES OF TREE.

CURB AND GUTTER

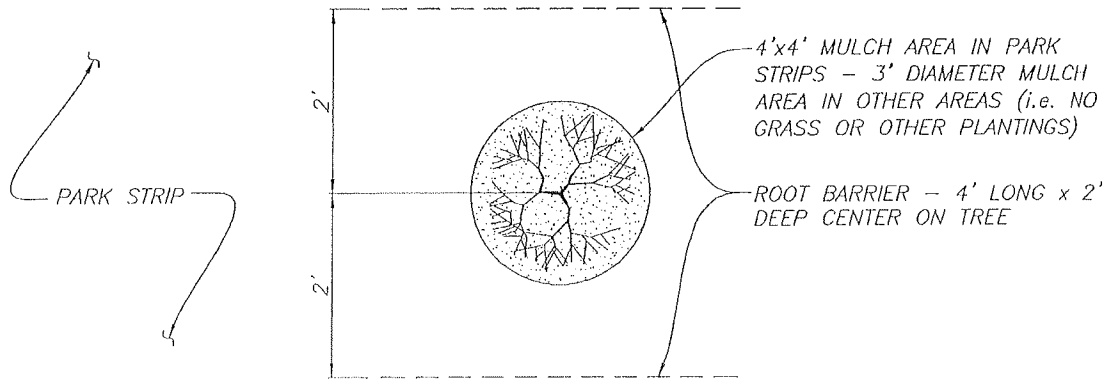

SIDEWALK

CITY OF PATTERSON IMPROVEMENT STANDARDS

TREE PLANTING IN PARK STRIPS

APPROVED BY: Michael Willett DATE: 03/26/2007

DRAWING NO. 3 - Y

Mar 02, 2C :16pm S:\LB15\Library\Details\City of Patterson\3 - Y.dwg

SECTION 4 - LIGHTING

SPECIFICATIONS:

4.1 GENERAL 4-1
4.2 DESIGN 4-1
4.3 REGULATIONS AND CODES 4-1
4.4 EXCAVATION AND BACKFILL 4-1
4.5 CONDUIT 4-1
4.6 PULL BOXES 4-2
4.7 FOUNDATIONS 4-2
4.8 ANCHOR BOLTS 4-2
4.9 CONDUCTORS 4-2
4.10 WIRING 4-2
4.11 POLES 4-3
4.12 ELECTROLIERS 4-3
4.13 PHOTOELECTRIC CELLS 4-3
4.14 TESTING 4-4
4.15 RECORD DRAWINGS 4-4

DRAWINGS:

4A STANDARD ELECTROLIER LOCATIONS
4B STANDARD ELECTROLIER LOCATIONS
4C STANDARD ELECTROLIER
4D DECORATIVE ELECTROLIER
4E STANDARD ELECTROLIER BASE DETAIL
4F DECORATIVE ELECTROLIER BASE DETAIL
4G ELECTROLIER STREET NAME SIGN ARM BRACKET

SECTION 4

LIGHTING

4.1 GENERAL

Street lighting shall be installed in conformance with these Improvement Standards by a Developer or Contractor holding an appropriate license for such work under the provisions of the State of California Business and Professions Code. All street lighting shall be owned by the City of Patterson.

Electroliers utilized for the project shall be either standard or decorative as determined by the City.

4.2 DESIGN

The lighting system shall be designed to best serve the area and to minimize the length of service runs from the points of connection to the street lights.

All street lights to be installed shall be shown on the Improvement Plans. The location of the power source, all conduit runs and pull boxes shall also be shown on the plans.

The spacing and location for standard electroliers shall be as shown on Drawings No. 4-A and 4-B. For decorative electroliers, spacing and location shall be as determined by the Engineer and as approved by the City Engineer.

4.3 REGULATIONS AND CODES

Regulations and codes shall conform to Section 86-1.02 of the State Standards.

4.4 EXCAVATION AND BACKFILL

Excavation and backfill shall be in accordance with Section 86-2.01 of the State Standards.

4.5 CONDUIT

All conductors shall be installed in conduit except inside poles. Conduit shall be in accordance with applicable sections of Section 86-2.05 of the State Standards and shall be sized in accordance with the National Electrical Code; however, in no case shall the conduit be smaller than that indicated in Section 86-2.05b of the State Standards. Conduit shall be installed in accordance with the applicable sections of Section 86-2.05c of the State Standards. All risers shall be rigid steel.

4.6 PULL BOXES

Pull boxes shall be in accordance with Section 86-2.06 of the State Standards, except that all pull boxes shall be concrete. Pull boxes shall be located where shown on the plans or where required by regulations or codes. In addition, a pull box shall be installed immediately adjacent to the light base. Pull boxes shall be Christy N16 with N16J lids or equivalent if located outside of vehicular travel areas. Where located inside vehicular travel areas, lids shall be Christy N16-61J or equivalent. All pull box covers shall be marked "Street Lighting," and installed at finished grade. Pull boxes shall be placed on a bed of pea gravel of 12-inch minimum thickness to allow drainage. Also, four concrete pavers or bricks shall be placed underneath the pull box to minimize settlement. Sufficient extensions shall be used to provide connection of conduits without offsets.

4.7 FOUNDATIONS

Foundations for poles shall conform to Drawing No. 4-D for standard electroliers and Drawing No. 4-F for decorative electroliers. Foundations shall be placed monolithically to within 4-inches of the sidewalk grade. After the pole is set, a square cap equal to the foundation diameter shall be installed to bring the foundation to sidewalk grade.

4.8 ANCHOR BOLTS

Anchor bolts for standard electroliers shall be 1-inch in diameter, 36 inches long with a 4-inch "L" bend at the bottom end. Anchor bolts for decorative electroliers shall be ¾-inch in diameter, 19 inches long. All anchor bolts shall conform to ASTM Designation A-307.

4.9 CONDUCTORS

Conductors shall conform to Section 86-2.08 of the State Standards.

4.10 WIRING

Wiring shall be in accordance with Section 86-2.09 of the State Standards. In addition, the Contractor shall pull through a test mandrel to remove any foreign matter that may damage the insulation before pulling the conductor. No conductors shall be pulled until the conduit run is complete. Extreme care shall be exercised when pulling conductors and cable into conduits to avoid kinking, twisting, nicking or scratching of the conductors and insulation, or the placement of extreme stress on the conductors or cable.

A fused splice connector shall be used to connect the light to the line in accordance with Section 86-2.095 of the State Standard Specifications. However,

the fused splice connector shall not be located in the pullbox but shall be located within the pole.

4.11 POLES

Standard electrolier poles shall be hot-dip galvanized steel. Thirty foot poles, shall be Ameron Catalog No. N-3015, Pacific Union Metal Manufacturing Company Catalog No. FS1130 P15 or an approved equal. Twenty-five foot poles shall be Ameron Catalog No. N-2512, Pacific Union Metal Manufacturing Company No. 71041-Y3-12 or an approved equal.

Decorative electroliers poles shall be 14-foot Hadco Catalog No. CP2532B or approved equal.

Poles shall not be installed until the foundation has set at least five (5) days. Poles shall be plumbed by adjusting the leveling nuts; leveling shims shall not be used.

Poles shall have hand-holes near their bases facing the street.

4.12 ELECTROLIERS

Standard electroliers shall be located according to size as shown on Drawings No. 4-A and 4-B. The luminaries shall be as follows or an approved equal:

200 watt	I.E.S. Type III	G.E. C798N806 Landmark 25-62J3
150 watt	I.E.S. Type III II-4	C760N510 Landmark CD56262-00C
100 watt	I.E.S. Type II	G.E. C760N526 Landmark CD56212-00C

Standard electroliers shall have high pressure sodium vapor lamps, glass refractors, built-in receptacles for photoelectric cells, and regulator or auto-regulator multi-tap (120/240 volt) ballasts with a power factor of not less than 92%.

Decorative electroliers shall be Hadco Lighting Catalog No. C2532A. They shall be provided with high pressure sodium vapor lamps, acrylic Type III globes, small reflector with H.S.S, a twist lock receptacle for the photo cell and a mogul socket for the bulb. Ballasts shall be auto regulating multi-tap (120/240 volt) with a power factor of not less than 92%.

4.13 PHOTOELECTRIC CELLS

Photoelectric cells shall be adjustable, compatible with related equipment and adequate for the load. They shall be General Electric C402G400 or an approved equal for standard electroliers.

4.14 TESTING

All streetlights shall be tested a minimum of 48 hours before acceptance by the City.

4.15 RECORD DRAWINGS

The Contractor shall provide the Design Engineer one (1) set of "Record Drawings" showing locations of all pull boxes, conduits, and street lights. The Design Engineer shall include this information on the Record Drawings in accordance with Section 1.9 of these Improvement Standards.

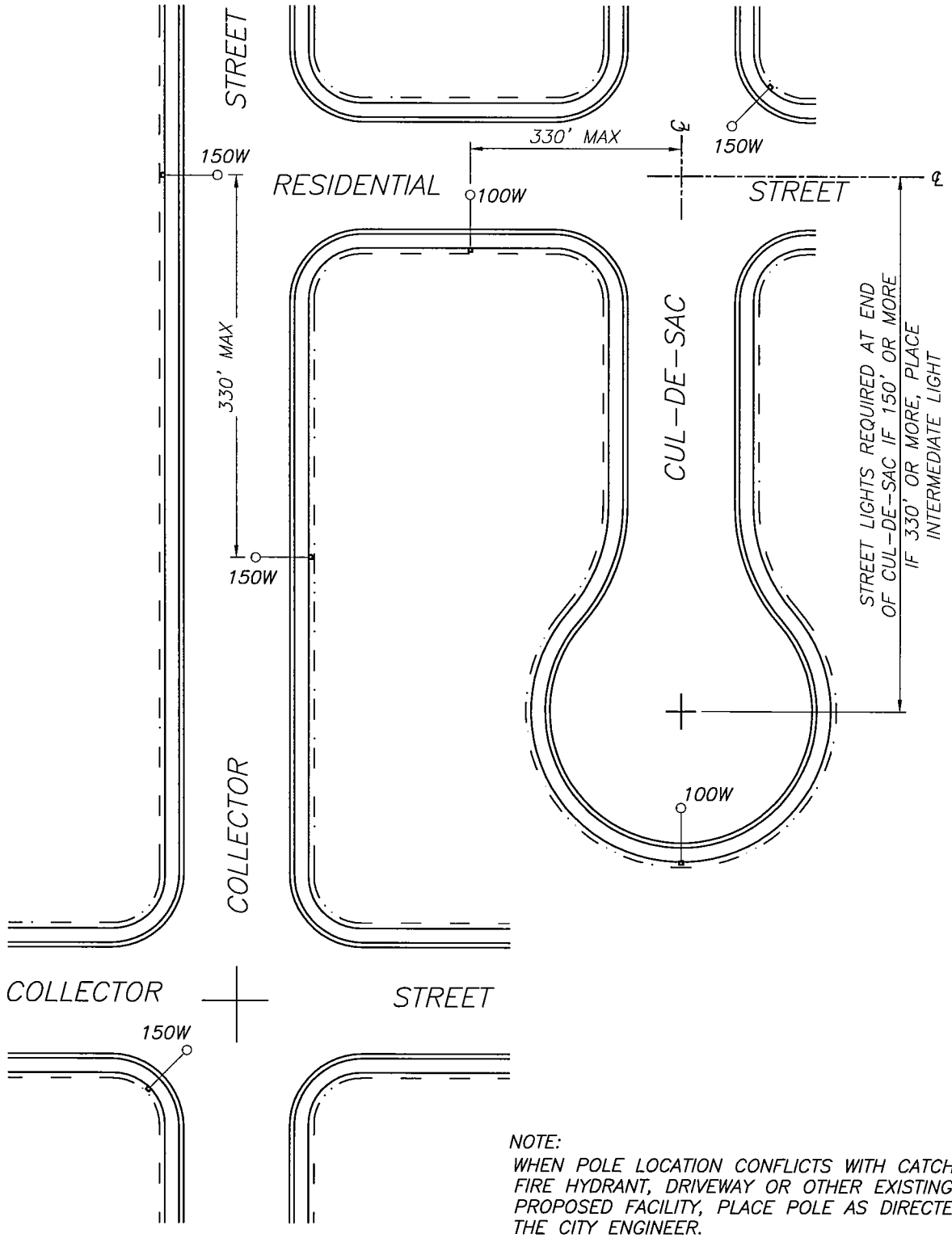

NOTE:
WHEN POLE LOCATION CONFLICTS WITH CATCH BASIN, FIRE HYDRANT, DRIVEWAY OR OTHER EXISTING OR PROPOSED FACILITY, PLACE POLE AS DIRECTED BY THE CITY ENGINEER.

CITY OF PATTERSON IMPROVEMENT STANDARDS

ELECTROLIER LOCATIONS

APPROVED BY: Ignacio Lopez

DATE: 8-3-04

DRAWING NO. 4 - A

Feb 13, 2003 - 4:37pm
\\Server_1\D\Library\Details\City of Patterson\02-20-02 DETAILS\4 - A.DWG

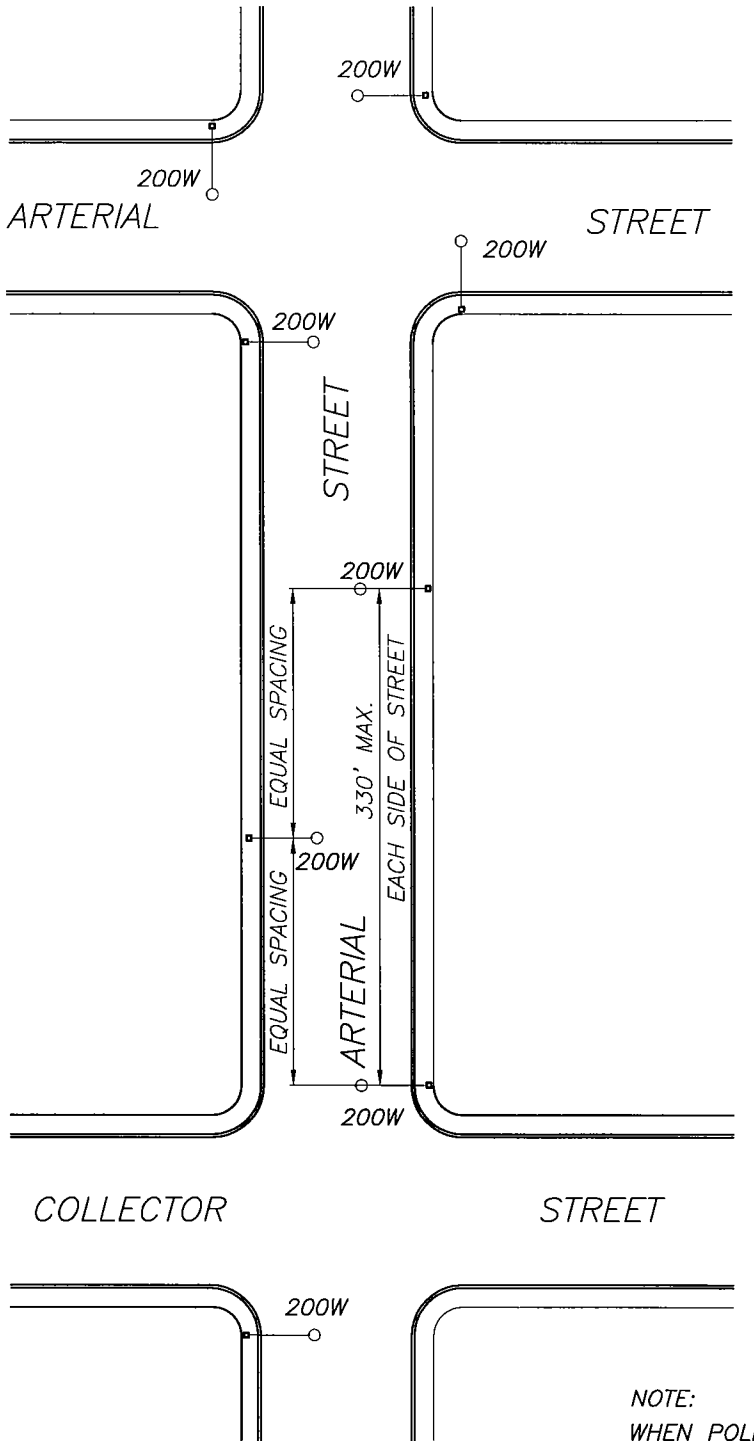

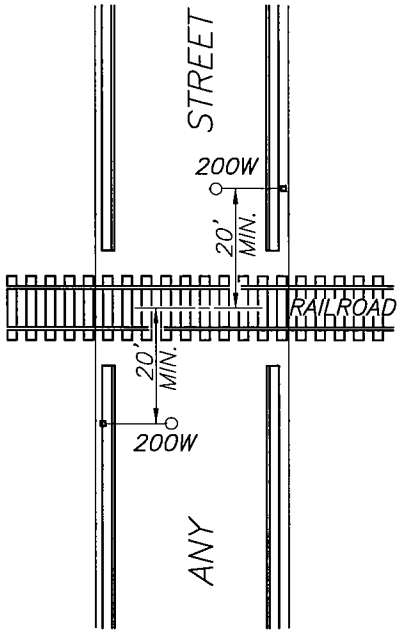

NOTE:

WHEN POLE LOCATION CONFLICTS WITH CATCH BASIN, FIRE HYDRANT, DRIVEWAY OR OTHER EXISTING OR PROPOSED FACILITY, PLACE POLE AS DIRECTED BY THE CITY ENGINEER.

CITY OF PATTERSON IMPROVEMENT STANDARDS

STANDARD ELECTROLIER LOCATIONS

APPROVED BY: Ignacio Lopez DATE: 8-3-04

DRAWING NO. 4 - B

Jul 26, 2004 - 10:19am \\Server_1\D\Library\Details\City of Patterson\4 - B.DWG

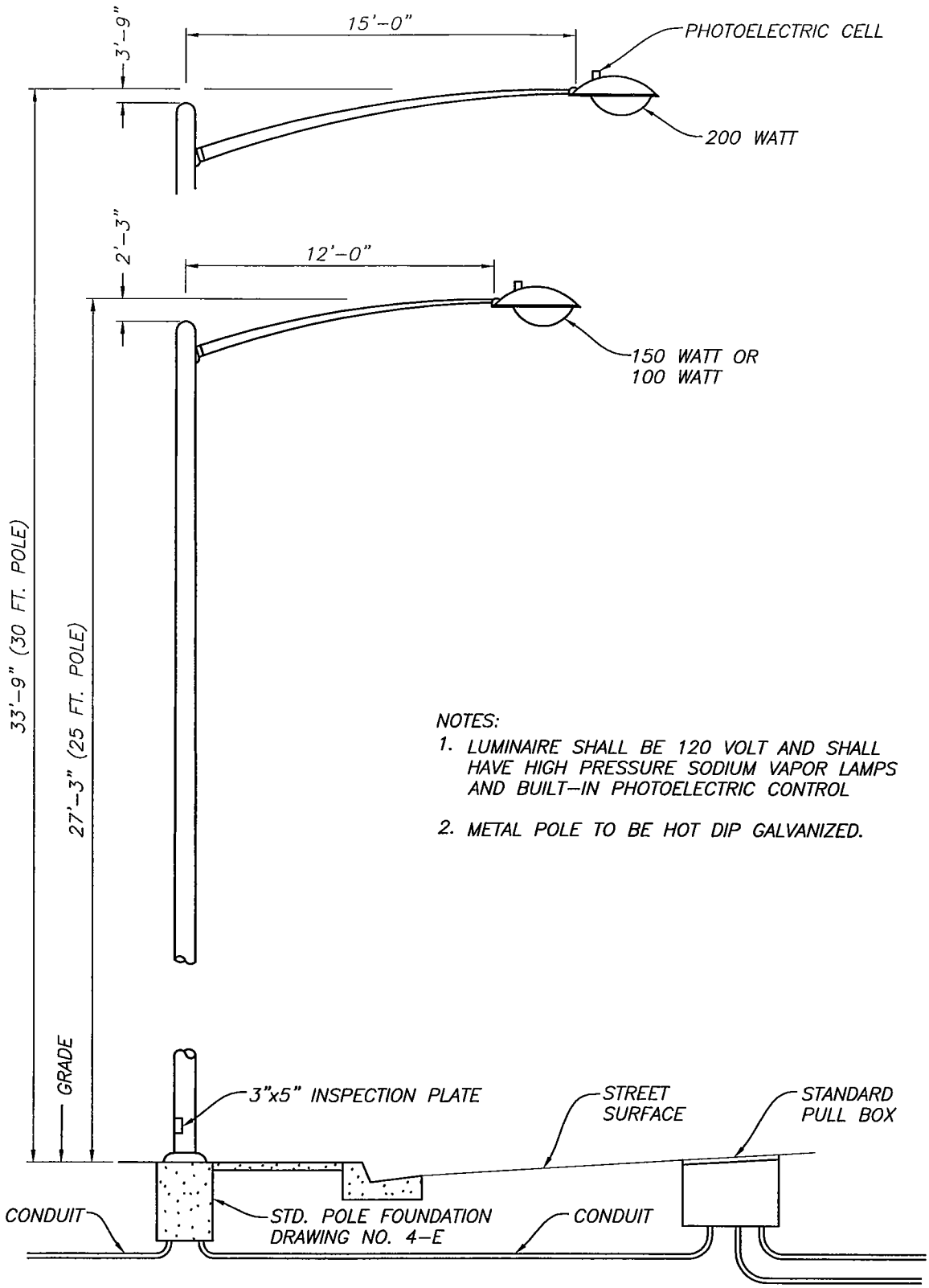

NOTES:

1. LUMINAIRE SHALL BE 120 VOLT AND SHALL HAVE HIGH PRESSURE SODIUM VAPOR LAMPS AND BUILT-IN PHOTOELECTRIC CONTROL
2. METAL POLE TO BE HOT DIP GALVANIZED.

CITY OF PATTERSON IMPROVEMENT STANDARDS

CITY OF PATTERSON INCORPORATED 1919

STANDARD ELECTROLIER

APPROVED BY: Ignacio Lopez DATE: 7-20-04

DRAWING NO. 4 - C

Jul 26, 2004 - 10:19am
\\Server_1\D\Library\Details\City of Patterson\4 - C.DWG

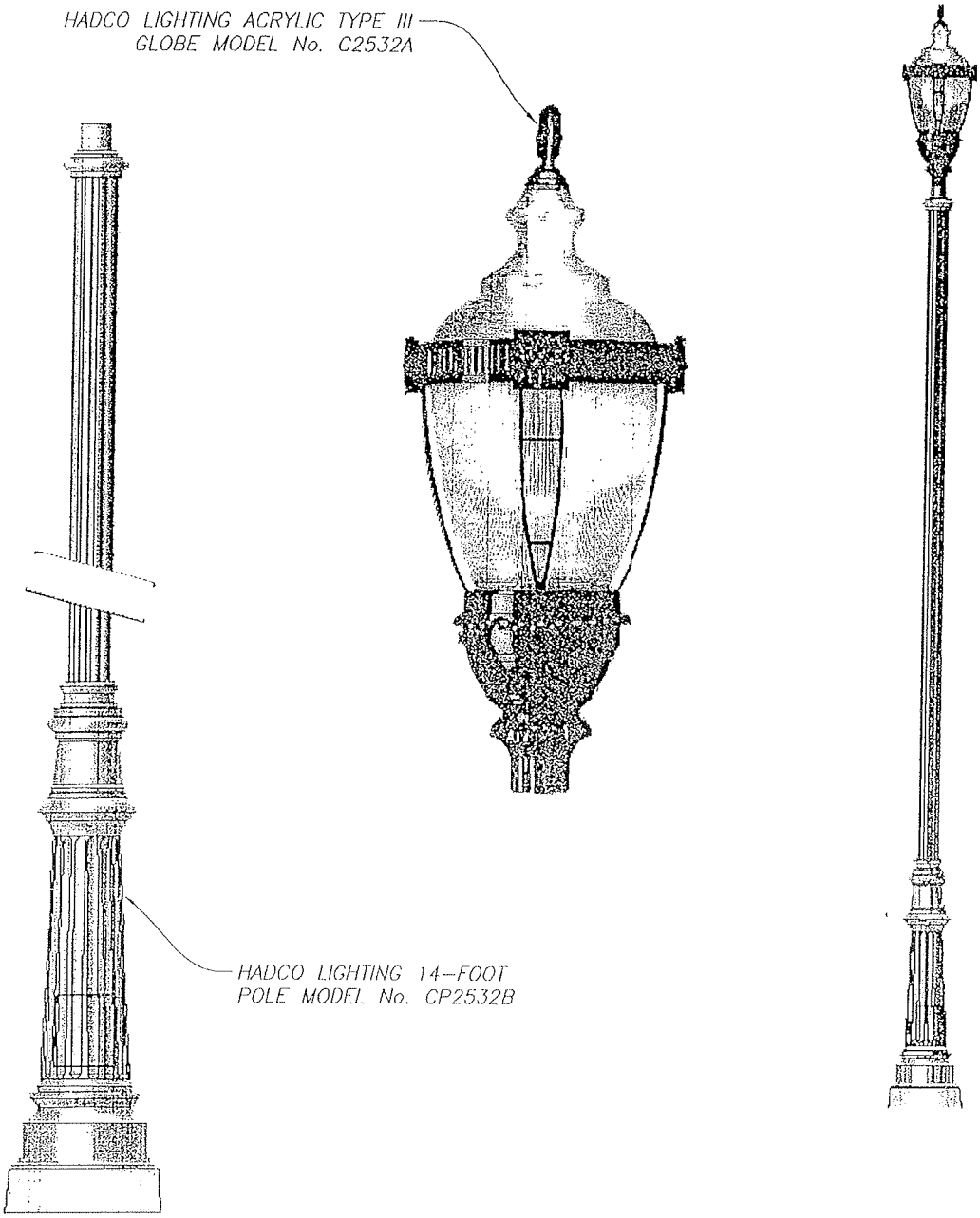

CITY OF PATTERSON IMPROVEMENT STANDARDS

DECORATIVE ELECTROLIER

APPROVED BY: Michael Willey DATE: 03/26/2007

DRAWING NO. 4 - D

Mar 01, 2t ..33pm
S:\LB15\Library\Details\City of Patterson\4 - D.DWG

NOTES:

1. CENTERLINE OF POLE TO BE 1 FOOT, 6 INCHES BEHIND BACK OF CURB FOR SEPARATED CURB AND SIDEWALK OR ATTACHED SIDEWALKS 7 FEET IN WIDTH OR WIDER. FOR ATTACHED CURB AND SIDEWALK 5 FEET IN WIDTH OR LESS INSTALL CENTERLINE OF POLE 1 FOOT 6 INCHES BEHIND BACK OF SIDEWALK.
2. PULLBOX LOCATED IMMEDIATELY ADJACENT TO ELECTROLIER BASE NOT SHOWN.

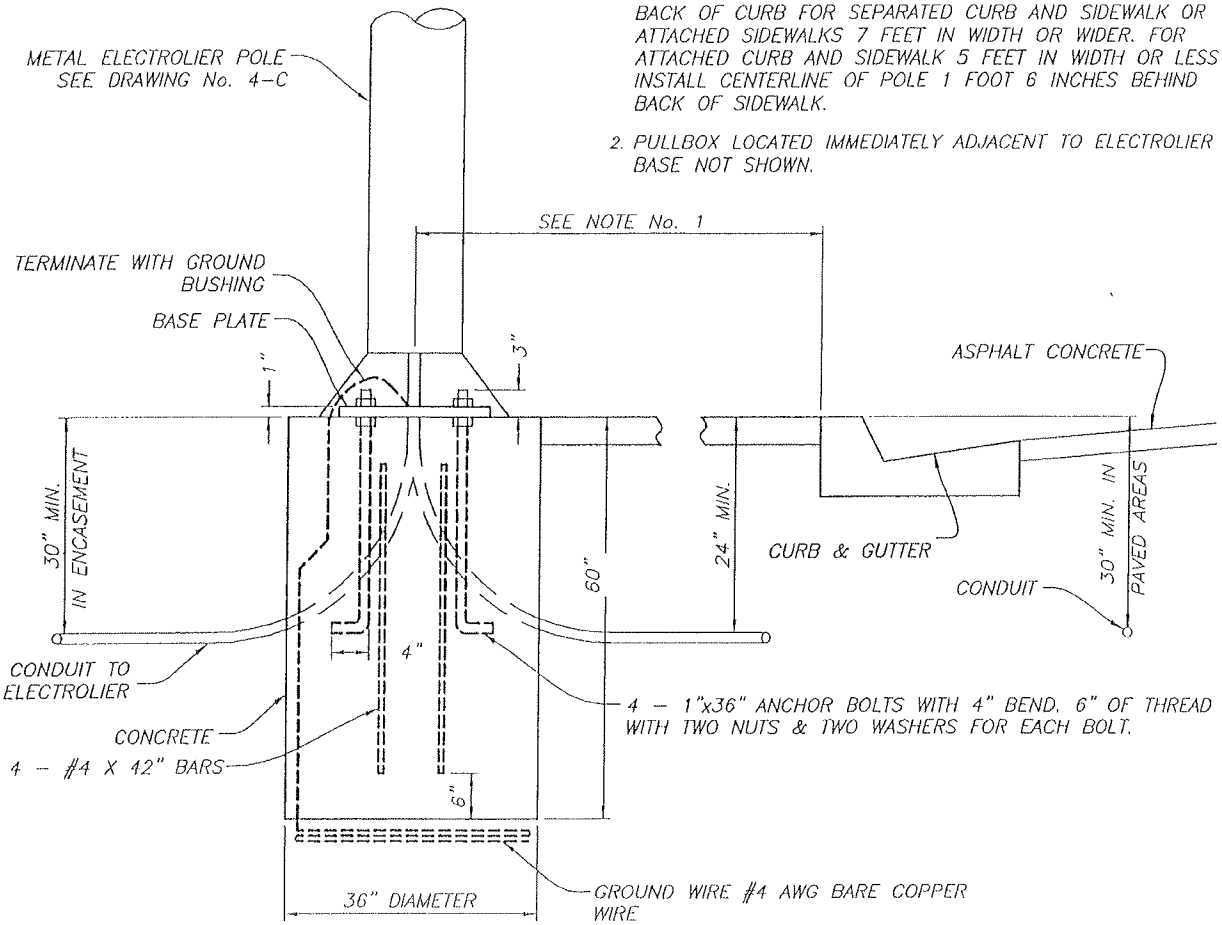

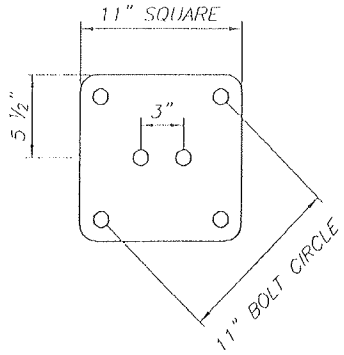

BASE PLATE

CITY OF PATTERSON IMPROVEMENT STANDARDS

STANDARD ELECTROLIER BASE DETAIL

APPROVED BY: Michael Willett DATE: 03/26/2007

DRAWING NO. 4 - E

Mar 01, 200. :34pm
S:\LB15\Library\Details\City of Patterson\4 - E.dwg

NOTES:

1. CENTERLINE OF POLE TO BE 1 FOOT 6 INCHES BEHIND BACK OF CURB FOR SEPARATED CURB AND SIDEWALK OR ATTACHED SIDEWALKS 7 FEET IN WIDTH OR WIDER. FOR ATTACHED CURB AND SIDEWALK 5 FEET IN WIDTH OR LESS INSTALL CENTERLINE OF POLE 1 FOOT 6 INCHES BEHIND BACK OF SIDEWALK.
2. PULLBOX LOCATED IMMEDIATELY ADJACENT TO ELECTROLIER BASE NOT SHOWN

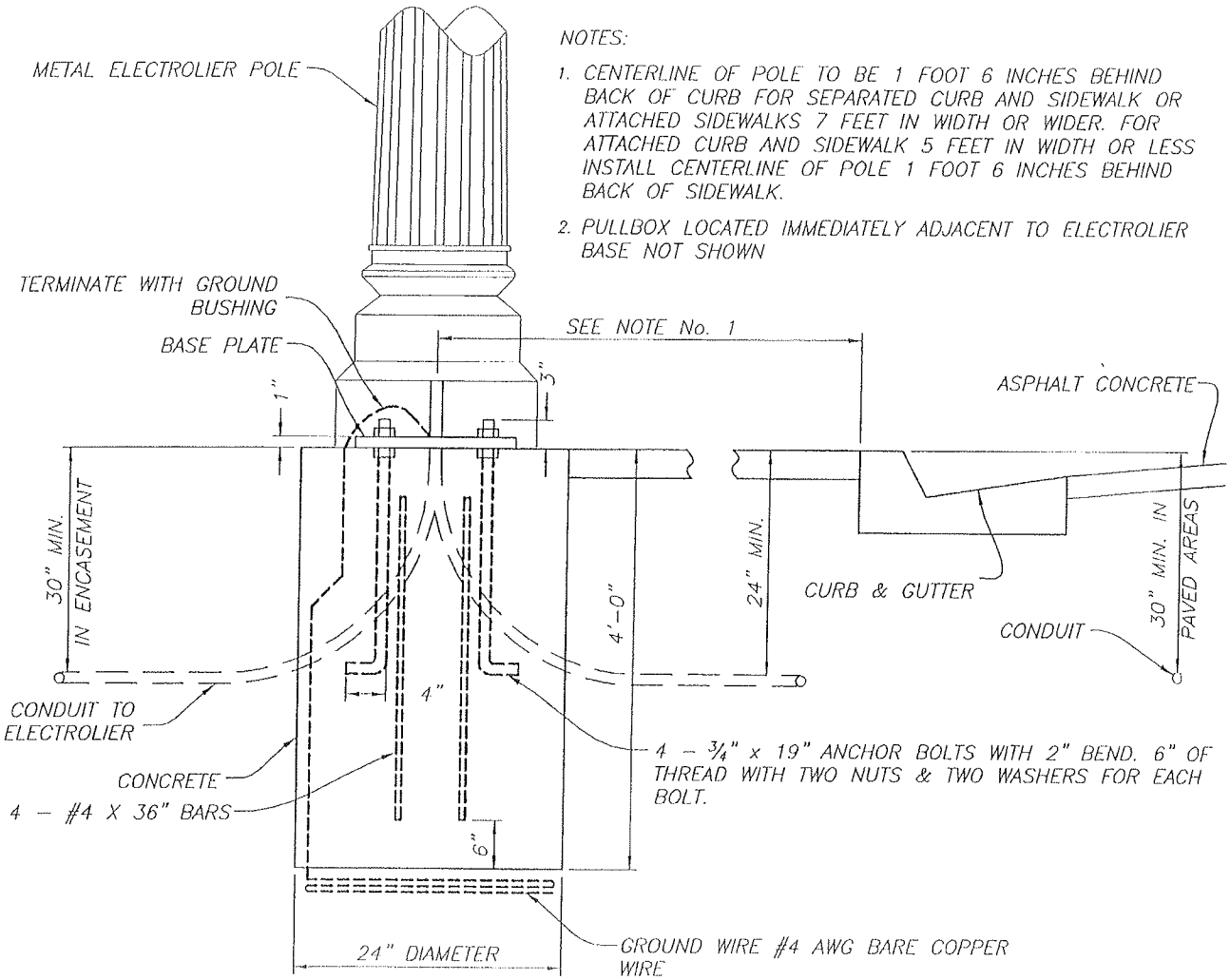

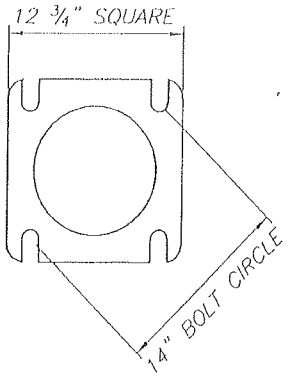

BASE PLATE

CITY OF PATTERSON IMPROVEMENT STANDARDS

DECORATIVE ELECTROLIER BASE DETAIL

APPROVED BY: Michael Wilbur 03/26/2007

DRAWING NO. 4 - F

Mar 01, 2006 .35pm
S:\LB15\Library\Details\City of Patterson\4 – F.dwg

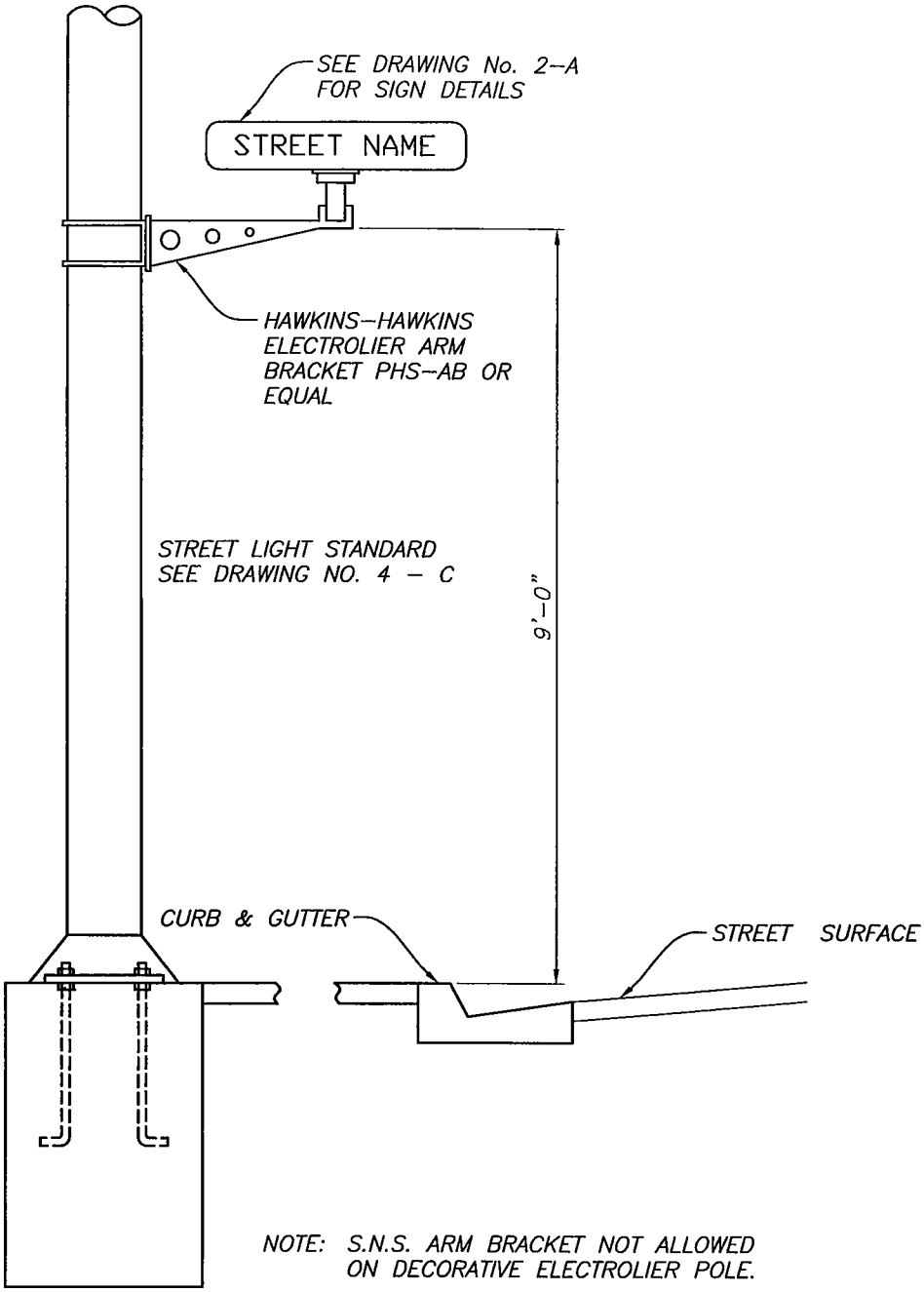

NOTE: S.N.S. ARM BRACKET NOT ALLOWED ON DECORATIVE ELECTROLIER POLE.

CITY OF PATTERSON IMPROVEMENT STANDARDS

ELECTROLIER S.N.S. ARM BRACKET

APPROVED BY: Ignacio Lopez DATE: 7-20-04

DRAWING NO. 4 - G

Jul 26, 2004 – 10:19am
\\Server_1\D\Library\Details\City of Patterson\4 – G.dwg

SECTION 5 – POTABLE WATER

SPECIFICATIONS:

5.1 GENERAL 5-1
5.2 DESIGN SUBMITTALS 5-1
5.3 DESIGN FLOW 5-1
5.4 PIPE DESIGN 5-2
5.5 PIPE 5-4
5.6 FITTINGS 5-4
5.7 VALVES AND VALVE BOXES 5-5
5.8 SERVICES 5-5
5.9 TRENCH EXCAVATION 5-6
5.10 WATER IN TRENCH 5-6
5.11 LAYING AND JOINTING OF PIPE 5-7
5.12 HANDLING OF PIPE ACCESSORIES 5-7
5.13 SERVICE INSTALLATION 5-7
5.14 FIRE HYDRANTS 5-7
5.15 TEMPORARY AND PERMANENT BLOW-OFFS 5-8
5.16 CONNECTIONS WITH EXISTING WATER LINES 5-8
5.17 INSPECTION 5-9
5.18 BEDDING AND BACKFILL OF TRENCHES 5-10
5.19 RESTORING SURFACE 5-10

DRAWINGS:

5A 1" DIAMETER WATER SERVICE
5B 2" DIAMETER WATER SERVICE
5C WATER METER SERVICE DETAIL
5D DOUBLE CHECK VALVE BACKFLOW PREVENTER
5E REDUCED PRESSURE BACKFLOW PREVENTER
5F WATER LINE GATE VALVE ASSEMBLY
5G FIRE HYDRANT ASSEMBLY
5H WATER LINE BLOW-OFF ASSEMBLY
5I THRUST BLOCKS DETAIL
5J TRENCH DETAIL

SECTION 5

POTABLE WATER

5.1 GENERAL

These Improvement Standards apply to all public water facilities designed for installation within a public right-of-way (ROW) or public utility easement (PUE) in the City and are limited to mains and services 12-inches or less in diameter. Standards and requirements for larger sizes will be determined by the City Engineer. In all developments, on-site mains and hydrants for fire protection shall be public. Other on-site facilities, unless specifically noted in these Improvement Standards or as required as part of project approval, shall be private and shall be designed and constructed in accordance with the provisions of the Uniform Plumbing Code, as adopted by the City.

Water lines shall be designed in accordance with acceptable engineering principles, California OSHA Standards; Department of Public Health Regulations, and California Code of Regulations Title 22; Chapter 16, California Waterworks Standards, and shall conform to these Improvement Standards.

5.2 DESIGN SUBMITTALS

Prior to submittal of Improvement Plans for the first phase of construction, a master water plan for the entire development shall be submitted to the City Engineer for review and approval. The plan shall include water flow and pressure calculations.

5.3 DESIGN FLOW

Unless other water usage figures are required or approved by the City, the following water demands shall be used for design calculations:

Development	Average Daily Demand	Peaking Factors Max. Day	Max. Hour
Single Family Detached	600 gpud	2.0	4.00
Single Family Attached	600 gpud	2.0	4.00
Multi Family, 2-4 Units	500 gpud	2.0	4.00
Multi Family, 5 Units or More	400 gpud	2.0	4.00
Commercial, Industrial & Others	*	2.0	4.00

gpud = gallons per unit per day
* = To be determined on a case-by-case basis.

Design fire flows shall be as follows unless otherwise approved by the City Fire Chief:

Land Use	Fire Flow
Low Density Residential	2000 gpm
Medium & High Density Residential	2000 gpm
Commercial & Industrial	3500 gpm

5.4 PIPE DESIGN

The minimum size pipe used for new water mains shall be 6 inches. Larger water lines may be required based on required fire flow, service demand or planned extension of the City's distribution system.

Permanent dead-end runs shall be no longer than 500 feet unless specifically approved by the City Engineer. Reasonable looping of water mains will be required.

The system shall be designed to maintain a minimum residual pressure of 20 psi at the service point or fire hydrant under the following demand conditions:

- maximum day flow plus fire flow, or;
- peak hour flow.

The Hazen-Williams formula shall be used to calculate design flow, pressure loss, velocity and pipe diameter relationships. The coefficient of friction, "C", shall be 130.

There are no slope requirements for water mains. However, inverts and pipe slopes shall be shown on the profile sheets of the Improvement Plans.

All high points within the system shall be located at fire hydrants or air release valves.

The minimum cover over water mains shall be 3 feet in both paved and unpaved areas. The maximum cover over water lines should not exceed 5 feet.

When crossing a wastewater or storm line, it is desirable that the water main be installed above the other pipeline with a clearance of 12 inches. If the desired clearance cannot be maintained, the water main shall be designed in accordance with the requirements of the California Department of Health Services for separation between water mains and sanitary sewers.

Water mains shall be installed within street rights-of-way unless placement in an easement is specifically approved by the City Engineer. Alignment shall be parallel to the street centerline wherever possible.

Permanent easements shall be provided on all mains not located in public rights-of-way. The minimum easement width shall be 15 feet. The main shall be located in the center of the easement unless otherwise required by the Director.

Water mains shall not be placed in easements across low density or medium density residential lots.

A minimum horizontal clearance of 10 feet shall be maintained between water mains and wastewater or storm drain lines, unless otherwise approved by the City Engineer. If the 10-foot separation is waivered by the City Engineer, the requirements of the California Department of Health Services for separation between water mains and sanitary sewers shall be adhered to.

Curved water mains are allowed; however, joint deflection or pipe curvature shall not exceed the pipe manufacturer's recommendations.

Valves on mains shall be spaced and located in conformance with the following criteria:

1. Water mains shall be valved on each side of railroad, highway and canal right-of-way crossings. (These valves shall be located outside of the right-of-way being crossed unless otherwise approved by the City Engineer.)

2. At "tees", valves are required as follows:

   - 2 valves where one leg is less than 10 inches in diameter, with one of the valves installed on the smaller leg.

   - 3 valves where all legs are 10 inches in diameter or larger.

3. At "crosses", valves are required as follows:

   - 3 valves where one or more legs is less than 10 inches in diameter with valves on each of the smaller legs.

   - 4 valves where all legs are 10 inches in diameter or larger.

4. At ends of mains or on stubs such that future extensions will not interrupt service.

5. At all fire hydrant assemblies.

The valving requirements mentioned above are minimum. Additional valves may be required.

Fire hydrants shall be spaced and located in accordance with the following criteria:

- At approximately 500 foot spacing in residential areas along one side of the street. Hydrants shall normally be placed at street intersections.

- At approximately 300 foot spacing in industrial areas.

- On streets classified as arterial or greater, the above spacing shall apply to both sides of the street. If buildings are separated from the street by a 6-foot or higher restrictive wall, hydrants shall be placed only at street intersections.

- At the ends of cul-de-sacs and permanent dead-end mains.

In commercial developments, locations and spacing shall be determined on a project-by-project basis by the City Fire Chief and City Engineer.

5.5 PIPE

The following standard pipe materials shall be used for water main construction and shall conform to the latest edition of appropriate American Water Works Association (AWWA) Standards:

Pipe Materials	Standard
Ductile Iron	AWWA C151
w/Cement Mortar Lining & Seal (std. thickness)	AWWA C104
Polyethylene Encasement	AWWA C105
PVC (iron pipe O.D.)	AWWA C900, DR 18 (Class 150) minimum

All ductile iron pipe shall be polyethylene encased per AWWA C105.

All water mains and services from the main to the meter shall be installed with 12 gauge TW single strand tracer wire.

5.6 FITTINGS

Bends, tees and other fittings shall be ductile iron conforming to AWWA C153.

Fittings shall be furnished with a joint type suitable for attaching to valves or other pressure pipe. Adaptor gaskets are not acceptable. Thrust blocking shall be constructed at bends, tees, dead-ends and where changes in pipe diameter occur. Blocking shall be made of Class 3 concrete, and shall be placed between undisturbed ground and the fitting to be anchored. The area of bearing on the pipe and on the ground shall be that required by Drawing No. 5-I. The blocking

shall be placed so that the joints of the pipe and fittings will be accessible for repair.

5.7 VALVES AND VALVE BOXES

Valves and valve boxes shall be installed at the locations shown on the plans.

All valves shall be Dresser "450" or resilient seated gate valve or Mueller A-2380 gate valve, or approved equal, and shall be the rubber-seated, tight-closing type conforming to the current AWWA Standard C-509. Valves shall open left and be equipped with a 2-inch AWWA approved operating nut.

Valve boxes shall be Christy G5 with Christy Iron Cover or approved equals. All valve boxes shall be installed to finished grade as per Drawing No. 5-F.

5.8 SERVICES

Each parcel shall have individual water service. In general, only one service is to be provided per parcel served. Five exceptions are as follows:

- For residential developments with on-site public mains, one standard service per dwelling unit may be required.
- For individual commercial/industrial buildings with multiple suites, one standard service with a 1-inch minimum water meter per suite shall be provided.
- In parcels with separate buildings, one standard service per building may be required (individual shut-offs per unit are required).
- In non-residential developments, separate water service(s) shall be provided for landscaped areas.
- In multi-family residential developments of 5 units or more, separate water service(s) shall be provided for landscape areas.

Due to the variety of building and main configurations and backflow requirements, the above requirements/exceptions are not specific. Details of each project shall be specifically approved by the City Engineer.

All water services shall be metered.

Size of service is to be determined by the Design Engineer for the parcel being served. (Minimum service size is 1-inch.)

A minimum horizontal clearance of 10 feet shall be maintained between water services and wastewater services, unless otherwise approved by the City Engineer.

For City maintained landscape areas, parks and detention basins, minimum water service sizes are as follows:

Parcel Size	Waterservice
Parcels less than 1.5 acres	2-inch
1.5 acres - 4.5 acres	3-inch
4.5 acres - 9.5 acres	4-inch
Parcel greater than 9.5 acres	To be determined

5.9 TRENCH EXCAVATION

The Contractor shall, prior to beginning construction, obtain from the Division of Industrial Safety the permit required by California Labor Code, Section 6500, and pay any fee charged for such permit. In addition thereto, whenever the work under the Contract involves trench excavation 5 feet or more in depth, the Contractor shall submit for approval to a registered civil or structural engineer representing the City, in advance of excavation, a detailed plan showing the design of shoring, bracing, sloping, or other provisions to be made for worker protection from the hazard of caving ground during the excavation. If such plan varies from the shoring system standards established by the Construction Safety Orders of the Division of Industrial Safety, the plan shall be prepared by a registered civil or structural engineer. Nothing in this section shall be deemed to allow the use of shoring, sloping or other protective system less effective than that required by the Construction Safety Orders. Nothing in this section shall be construed to impose tort liability on the City, City Engineer, or any of their officers, agents or employees.

The pipe trench shall be dug with side walls sloped or otherwise supported in a safe manner in accordance with the Department of Industrial Relations, Division of Occupational Safety and Health Administration regulations pertaining to trenching.

Excavated material shall be placed on only one side of the trench unless otherwise directed. Separation distance between piles of excavated material and trench shall be consistent with the Construction Safety Orders.

The alignment and grade for the bottom of the trench shall be properly established before the trench is excavated and shall be approved by the City before the pipe is laid. Trenches shall be true to line and grade, and the bottom shall be even and free from all objectionable material.

5.10 WATER IN TRENCH

When water is encountered in the trench, it shall be removed by draining or by pumping. Should water get into the trench before the pipe is laid, the laying of pipe shall be postponed until the trench has dried sufficiently to provide a firm foundation for the pipe or else, the mud or softer material shall be removed and

grade re-established by backfilling and compacting with suitable material as determined by the City.

5.11 LAYING AND JOINTING OF PIPE

Laying and jointing of pipe shall be in accordance with the manufacturer's recommendations and as approved by the City. Joint deflections shall not exceed 80% of the maximum recommendations of the manufacturer.

Where rubber gaskets are used for jointing pipe, a feeler gauge shall be used to check the position of the rubber gasket upon each closure. The interior of the pipe shall be cleared of all debris, and exposed pipe ends shall be closed by a suitable pipe plug when pipe laying is not in progress.

The pipe shall be laid on a trench bottom shaped to provide adequate and uniform support of the pipe except at coupling or bell holes. The use of prepared mounds to facilitate laying of the pipe is not approved.

Where pipe is to be encased or have concrete bedding, suitable concrete blocks shall be used to support the pipe in the proper location while placing concrete.

5.12 HANDLING OF PIPE ACCESSORIES

Proper implements, tools, and facilities satisfactory to the City shall be provided and used by the Developer or Contractor for the safe and efficient execution of the work. All pipe, fittings, valves, hydrants and accessories shall be lowered into the trench in such a manner as to prevent damage to pipe fittings. Under no circumstances shall pipe or accessories be dropped or dumped into the trench. All foreign matter or dirt shall be removed from the interior of pipe before lowering into position in the trench. Pipe shall be kept clean by means approved by the City Engineer during and after laying. All pipe and accessories shall be inspected for defects prior to lowering into trench. Any defective, damaged or unsound pipe or accessory shall be repaired or replaced at the Developer's or Contractor's expense.

5.13 SERVICE INSTALLATION

The services shall be installed per Drawings No. 5-A, 5-B and 5-C.

Special care shall be exercised to insure proper compaction is made under curb stop so it is vertical and the meter idler is level. Compaction shall be made under and around the meter box so it remains level and at the finished sidewalk grade.

5.14 FIRE HYDRANTS

Fire hydrants shall be installed at the locations shown on the plans in conformance with Drawing No. 5-G. Hydrants shall be a "traffic type" with a replaceable breakaway section immediately above the groundline.

The Contractor shall adjust the "bury length" of the hydrant to provide proper installation. The pumper nozzle shall be rotated to face the street after installation.

Fire hydrants shall be Clow Model 960, or approved equal and shall conform to the latest AWWA Standard, C-503, for wet-barrel fire hydrants. All hydrants shall be furnished with a factory traffic yellow enamel finish coat followed by two coats of "Rust-Oleum 7543, Safety Yellow".

Prior to applying the non-factory paint coats, the surface shall be free of any deleterious material by hand cleaning with solvents, wire brushes and or sandpaper to remove all oil, grease, dirt, loose rust, dead paint or paint that is not firmly bonded to the hydrant surfaces. Any areas where metal is exposed following the cleaning process shall be painted with one coat of "Rust-Oleum 7780, Clean Metal Primer".

5.15 TEMPORARY AND PERMANENT BLOW-OFFS

Temporary and permanent blow-offs shall be installed at the locations shown on the plans in conformance with Drawing No. 5-H unless otherwise required by the City Engineer. The final length of pipe, prior to the blow-off, shall be 18 to 39 inches.

All salvaged temporary blow-offs shall become the property of the Developer or Contractor and shall be removed from the job site before completion.

5.16 CONNECTIONS WITH EXISTING WATER LINES

The Contractor shall make all excavations for connection to existing water lines and shall make connections to existing water line in the presence of the City.

Developer shall use an approved double check backflow preventer between the existing water main and the new line to fill lines with water for testing and disinfection purposes. City personnel must be the only ones to open or close existing water valves.

Connections shall be made at such times as designated by the City and in such a manner as to insure the least inconvenience to water users. No connection shall be made until the new work has been tested and disinfected as specified hereinafter. The Contractor shall be responsible for safeguarding the existing system from all damage and possible contamination in the performance of his work.

5.17 INSPECTION

1. All water lines shall be inspected for proper installation by the City Engineer, prior to backfilling of trenches.

2. HYDROSTATIC TEST

After installing pipe and prior to complete backfilling of trenches, the entire length of each line shall be subjected to a hydrostatic pressure of not less than 150 psi for a period of not less than 2 hours. Curb stops, idler fittings and fire hydrant units shall also be included in the hydrostatic test. No pipe installation will be accepted if leakage for the section is greater than the allowable leakage determined by using one of the following formulas, as applicable:

$$\text{For Polyvinyl Chloride Pipe - } L = \frac{ND\sqrt{P}}{7400}$$

(L = Allowable leakage in gallons per hour. N = Number of joints in length of pipeline. D = Nominal diameter of the pipe in inches. P = Average test pressure in pounds per square inch.), or

$$\text{For Ductile Iron Pipe - } L = \frac{SD\sqrt{P}}{133{,}200}$$

(L = Allowable leakage in gallons per hour. S = Length of pipe tested in feet. D = Nominal diameter of the pipe in inches. P = Average test pressure in pounds per square inch.)

Water for testing may be taken from the nearest blow-off, fire hydrant or other approved source. All pipe, fittings, valves, couplings, and other materials needed to fill the test lines with water shall be supplied and installed by the Developer or Contractor. Care shall be taken not to contaminate the existing system.

The pump, gauge, pipe connection, and all necessary apparatus and equipment needed for the test shall be supplied by the Developer or Contractor.

The Developer or Contractor shall permanently stop all leaks. After repairing all defective items, the line shall be tested again to determine final acceptability of the installation.

3. DISINFECTING WATER MAINS

Water mains shall be disinfected in conformance with the procedure specified in the current standards for AWWA C651 "Disinfecting Water

Mains" or other procedure satisfactory to the City Engineer. Only one connection shall be made between the existing City system and the system being disinfected unless otherwise approved by the Director. A temporary backflow prevention device as approved by the Director shall be installed between the two systems. Upon successful completion of the disinfection process, the temporary backfill prevention device shall be removed.

Chlorine shall be introduced into the lines at service connections or at such locations along the line that uniform distribution of chlorine throughout the line is ensured, including services, fire hydrants and stubs.

After final fleshing, a testing laboratory, approved by the Director, shall take two consecutive sets of water samples from the system at least 24 hours apart. All samples shall be drawn from locations designated by and in the presence of the Director.

The system must pass both consecutive negative bacteriological tests prior to removal of the backflow prevention device.

Valves or other connections between the existing system and new system shall not be opened or completed until certification of the passing bacteriological tests have been received and reviewed by the Director.

The Contractor shall be responsible for all testing costs.

5.18 BEDDING AND BACKFILL OF TRENCHES

Bedding and backfill shall be as shown on Drawing No. 5-J.

5.19 RESTORING SURFACE

The surface of all trenches shall be filled and compacted so that the surface will conform to the condition of the surrounding ground. The repaving requirements of the plans shall be met regardless of type of existing surfacing.

Existing pavement shall be cut in neat parallel lines as shown on Drawing No. 5-J.

Aggregate base shall be Class II compacted to 95% relative compaction. Aggregate base shall have 3/4-inch maximum combined grading.

Asphalt concrete shall be Type B, AR 8000 with 1/2-inch maximum aggregate, medium grading.

A paint binder of asphaltic emulsion shall be applied to all surfaces in conformance with Section 39-4.02 of the State Standards.

Mar 01, 200 .47pm
S:\LB15\Library\Details\City of Patterson\5 – A.dwg

CITY OF PATTERSON IMPROVEMENT STANDARDS

1" DIAMETER WATER SERVICE

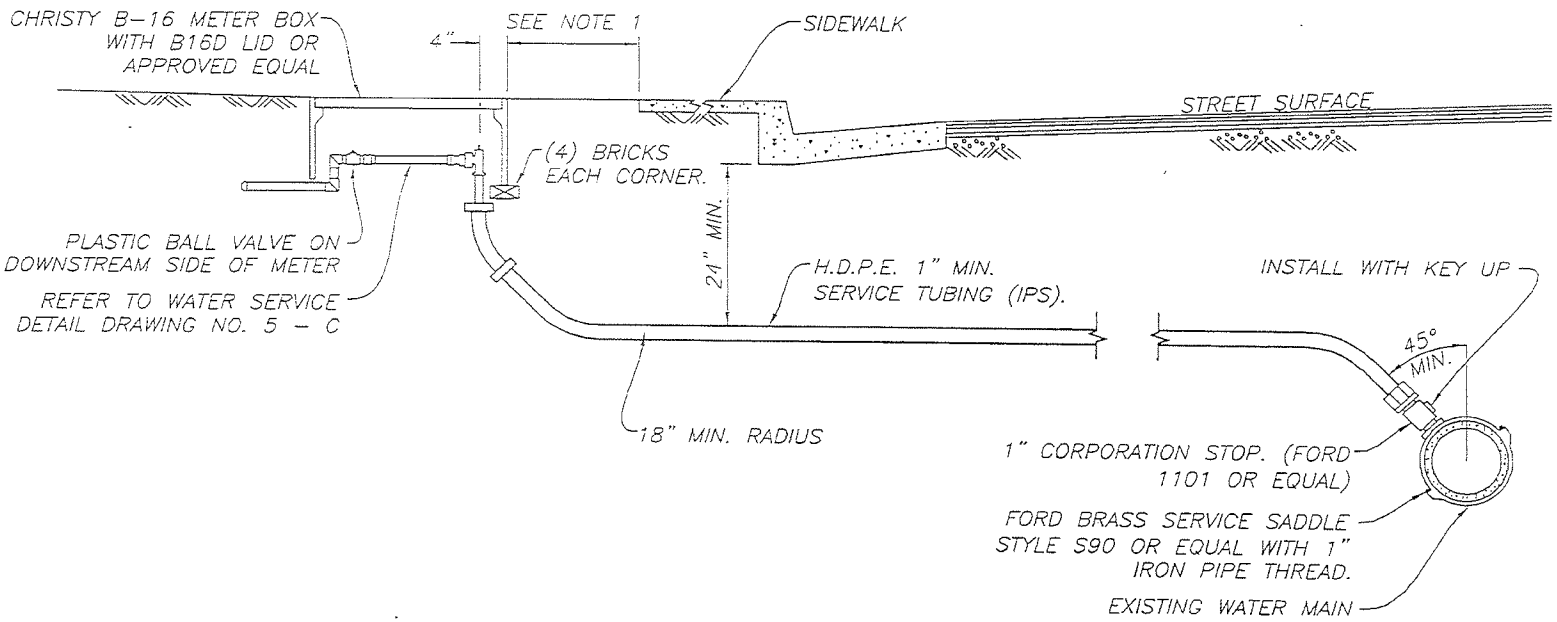

NOTES:

1. ONE FOOT FROM BACK OF SIDEWALK FOR ATTACHED CURB AND SIDEWALK. FOR AREAS WITH SEPARATED CURB AND SIDEWALK ONE FOOT FROM BACK OF CURB.
2. SERVICE LATERALS SHALL BE POLYETHYLENE PLASTIC PIPE (PE3408, SDR7, PR160 P.S.I.) IN IRON PIPE SIZES AND SHALL BE SUITABLE FOR TRANSPORTING POTABLE WATER. POLYETHYLENE PIPE SHALL COMPLY WITH A.S.T.M. STANDARD D2239.
3. TRAFFIC LID REQUIRED IF LOCATED IN TRAVELED AREA AT CUSTOMER'S EXPENSE.
4. STAINLESS STEEL INSERT STIFFENERS SHALL BE USED INSIDE P.E. TUBING AT ALL PACK JOINT CONNECTIONS.
5. CURB STOPS SHALL BE DIRECTLY OPPOSITE SERVICE SADDLES UNLESS OTHERWISE APPROVED BY THE CITY ENGINEER.
6. INSTALL TRACER WIRE ALONG SERVICE FROM MAIN TO METER.

APPROVED BY: Michael Wilson 03/26/2007

DRAWING NO. 5 - A

Feb 28, 2011 – 11:03am
S:\LB15\Library\Details\City of Patterson\5 – B.dwg

CITY OF PATTERSON IMPROVEMENT STANDARDS

2" DIAMETER WATER SERVICE

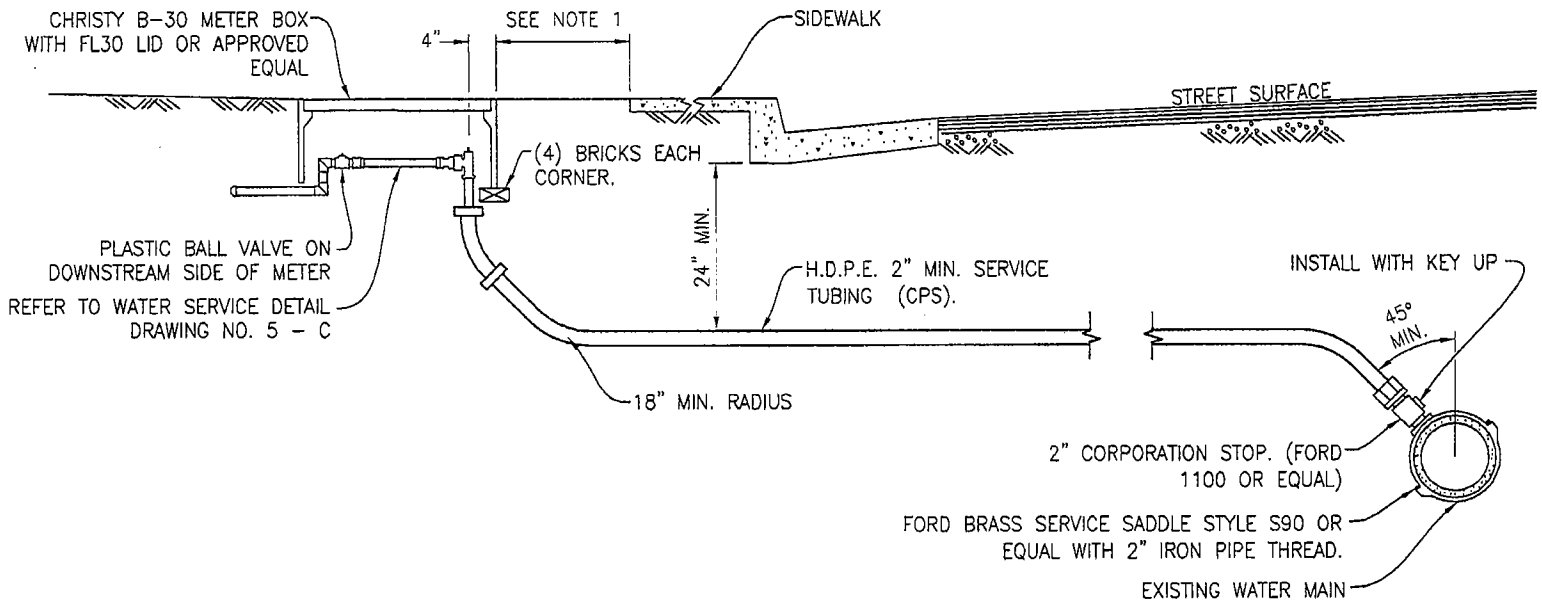

NOTES:

1. ONE FOOT FROM BACK OF SIDEWALK FOR ATTACHED CURB AND SIDEWALK. FOR AREAS WITH SEPARATED CURB AND SIDEWALK ONE FOOT FROM BACK OF CURB.
2. SERVICE LATERALS SHALL BE POLYETHYLENE PLASTIC PIPE (PE3408, SDR7, PR160 P.S.I.) IN COPPER TUBING SIZES AND SHALL BE SUITABLE FOR TRANSPORTING POTABLE WATER. POLYETHYLENE PIPE SHALL COMPLY WITH A.S.T.M. STANDARD D2239.
3. TRAFFIC LID REQUIRED IF LOCATED IN TRAVELED AREA AT CUSTOMER'S EXPENSE.
4. STAINLESS STEEL INSERT STIFFENERS SHALL BE USED INSIDE P.E. TUBING AT ALL PACK JOINT CONNECTIONS.
5. CURB STOPS SHALL BE DIRECTLY OPPOSITE SERVICE SADDLES UNLESS OTHERWISE APPROVED BY THE CITY ENGINEER.
6. INSTALL TRACER WIRE ALONG SERVICE FROM MAIN TO METER.

APPROVED: Michael Willes DATE: 5/12/11

DRAWING NO. 5 - B

NOTES

1. SERVICE FROM MAIN
2. ANGLE METER VALVE (FORD BA63 – 444W OR EQUAL FOR 1" SERVICE. FORD BFA43–777W OR EQUAL FOR 2" SERVICE)
3. 1" x ¾" METER ADAPTER (FORD A34 OR EQUAL) FOR 1" SERVICE
4. BADGER ORION READ METER
5. 1" STRAIGHT METER COUPLING (MUELLER H–10896 OR EQUAL) FOR 1" SERVICE. 2" METER FLANGE BY 2" FEMALE IRON PIPE THREAD FOR 2" SERVICE.
6. PLASTIC BALL VALVE THREAD X THREAD
7. SCHEDULE 80 THREADED PVC NIPPLE
8A. SCHEDULE 40 THREADED X SLIP PVC ELBOW
8B. SCHEDULE 40 SLIP X SLIP PVC ELBOW
8C. SCHEDULE 40 SLIP X SLIP NIPPLE
9. SCHEDULE 40 PVC WITH CAP
10. METER BOX
11. BRICK (EACH CORNER OF BOX)
12. TRACER WIRE

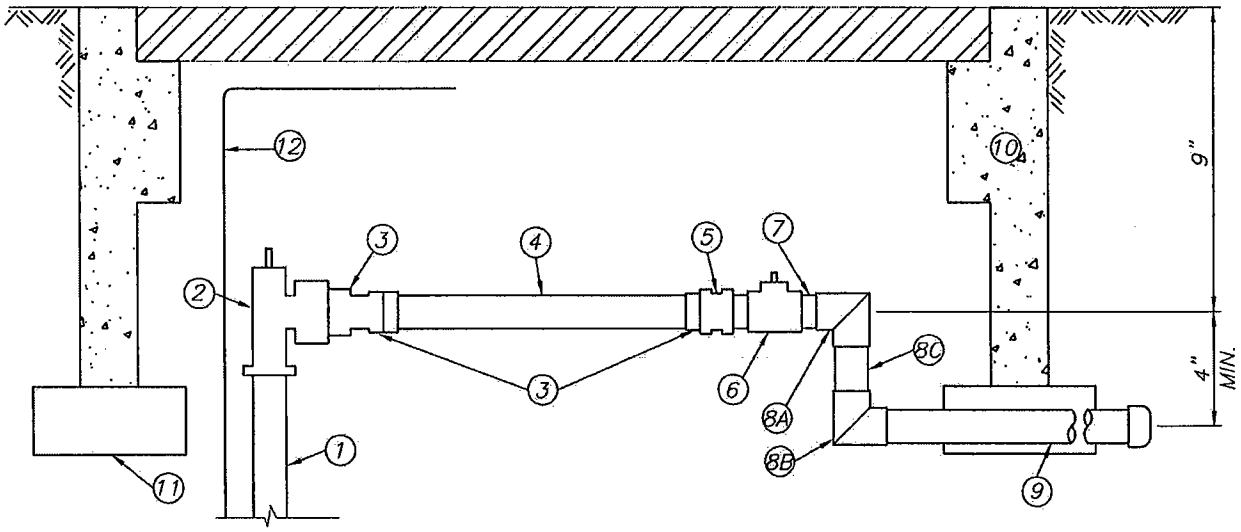

CITY OF PATTERSON IMPROVEMENT STANDARDS

WATER METER SERVICE DETAIL

APPROVED BY: Michael Willett DATE: 3-17-09

DRAWING NO. 5 - C

Feb 24, 2009 – 4:36pm
\\USLBS1FP001\data\Stoddard\LB15\Library\Details\City of Patterson\5 – C.dwg

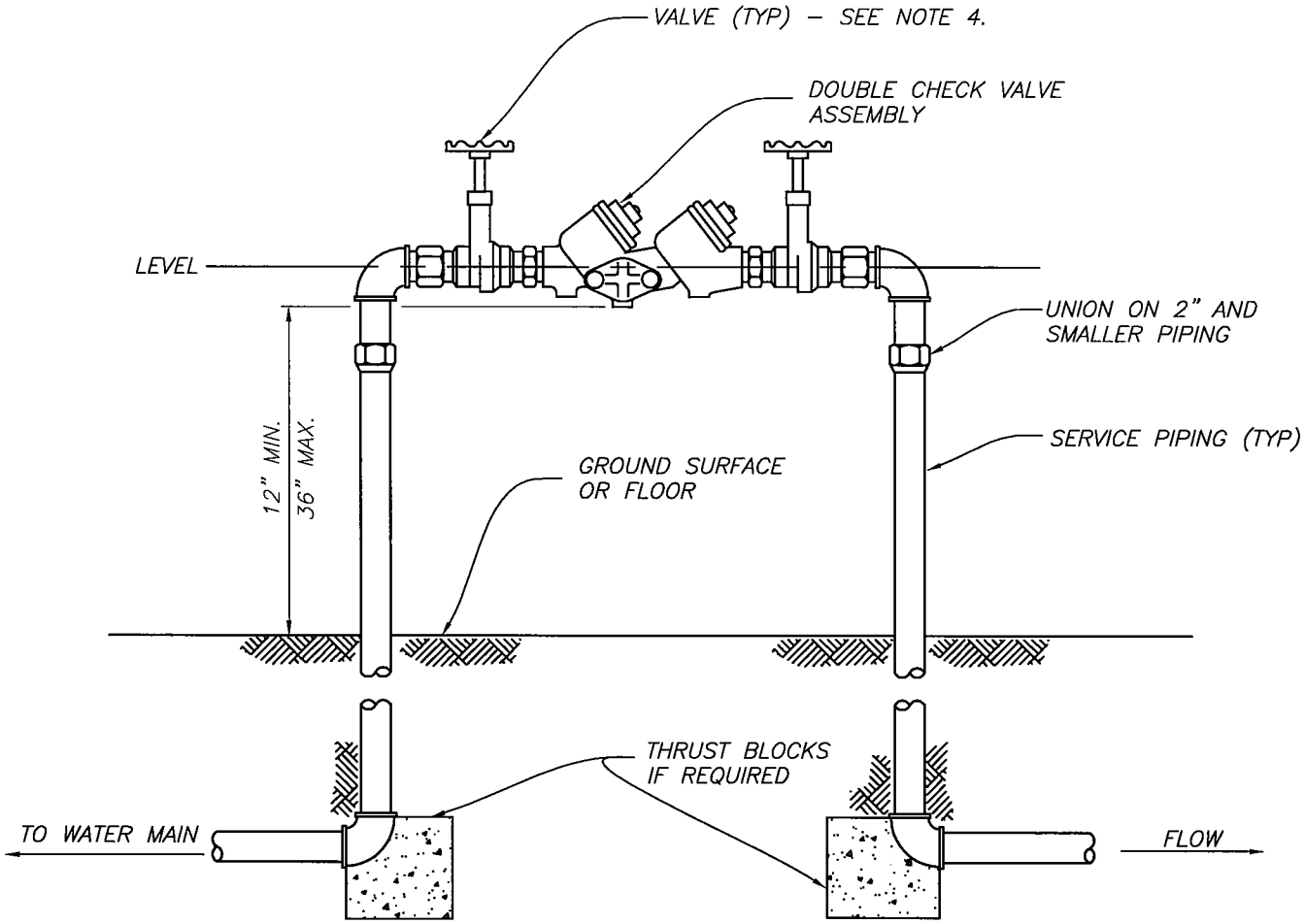

NOTES:

1. MANUFACTURING AND MODEL NUMBER OF BACKFLOW PREVENTION ASSEMBLY SHALL BE APPROVED BY THE DIRECTOR PRIOR TO INSTALLATION.

2. ABOVE GROUND SERVICE PIPING FOR BACKFLOW PREVENTION DEVICES 2 INCHES IN DIAMETER AND SMALLER SHALL BE TYPE K COPPER OR BRASS. SERVICE LINES 4–INCH DIAMETER AND SMALLER BUT LARGER THAN 2–INCHES IN DIAMETER SHALL BE GALVANIZED STEEL. WRAP ALL METALLIC PIPING BELOW GROUND AND WITHIN 6–INCHES OF GROUND SURFACE WITH 2 LAYERS OF 10–MIL CALPICO TAPE.

3. SUPPORTS WHERE PROVIDED SHALL NOT INTERFERE WITH TESTING AND MAINTENANCE.

4. BALL VALVES SHALL BE INSTALLED ON 2–INCH AND SMALLER BACKFLOW PREVENTION ASSEMBLIES. GATE VALVES SHALL BE UTILIZED ON BACKFLOW PREVENTION ASSEMBLIES LARGER THAN 2–INCH.

5. INSTALL AN INSULATING BAG AS APPROVED BY DIRECTOR AROUND ASSEMBLY.

6. BACKFLOW PREVENTION ASSEMBLY SHOWN IS FOR NON–FIRE FLOW APPLICATION. BACKFLOW PREVENTION INSTALLATIONS FOR FIRE PREVENTION SHALL BE AS APPROVED BY THE FIRE CHIEF.

CITY OF PATTERSON IMPROVEMENT STANDARDS

CITY OF PATTERSON INCORPORATED 1919

DOUBLE CHECK VALVE BACKFLOW PREVENTER

APPROVED BY: Ignacio Lopez DATE: 8-3-04

DRAWING NO. 5 - D

Jul 26, 2004 – 10:19am
\\Server_1\D\Library\Details\City of Patterson\5 – D.dwg

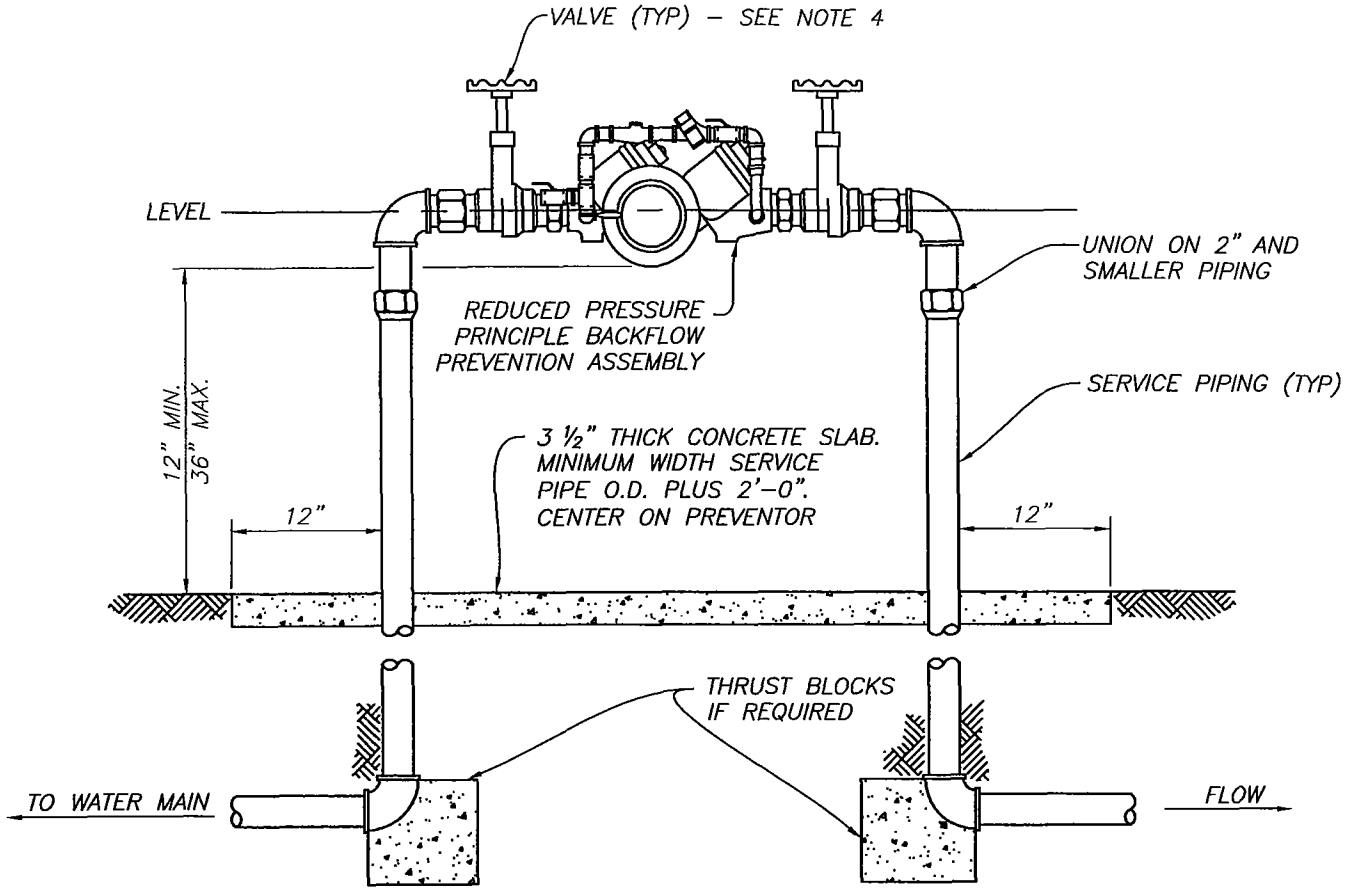

NOTES:

1. MANUFACTURING AND MODEL NUMBER OF BACKFLOW PREVENTION ASSEMBLY SHALL BE APPROVED BY THE DIRECTOR PRIOR TO INSTALLATION.

2. ABOVE GROUND SERVICE PIPING FOR BACKFLOW PREVENTION DEVICES 2 INCHES IN DIAMETER AND SMALLER SHALL BE TYPE K COPPER OR BRASS. SERVICE LINES 4–INCH DIAMETER AND SMALLER BUT LARGER THAN 2–INCHES IN DIAMETER SHALL BE GALVANIZED STEEL. WRAP ALL METALLIC PIPING BELOW GROUND AND WITHIN 6–INCHES OF GROUND SURFACE WITH 2 LAYERS OF 10–MIL CALPICO TAPE.

3. SUPPORTS WHERE PROVIDED SHALL NOT INTERFERE WITH TESTING AND MAINTENANCE.

4. BALL VALVES SHALL BE INSTALLED ON 2–INCH AND SMALLER BACKFLOW PREVENTION ASSEMBLIES. GATE VALVES SHALL BE UTILIZED ON BACKFLOW PREVENTION ASSEMBLIES LARGER THAN 2–INCH.

5. INSTALL AN INSULATING BAG AS APPROVED BY DIRECTOR AROUND ASSEMBLY.

CITY OF PATTERSON IMPROVEMENT STANDARDS

CITY OF PATTERSON INCORPORATED 1919

REDUCED PRESSURE BACKFLOW PREVENTER

APPROVED BY: Ignacio Lopez DATE: 7-20-04

DRAWING NO. 5 - E

Jul 26, 2004 – 10:19am
\\Server_1\D\Library\Details\City of Patterson\5 – E.dwg

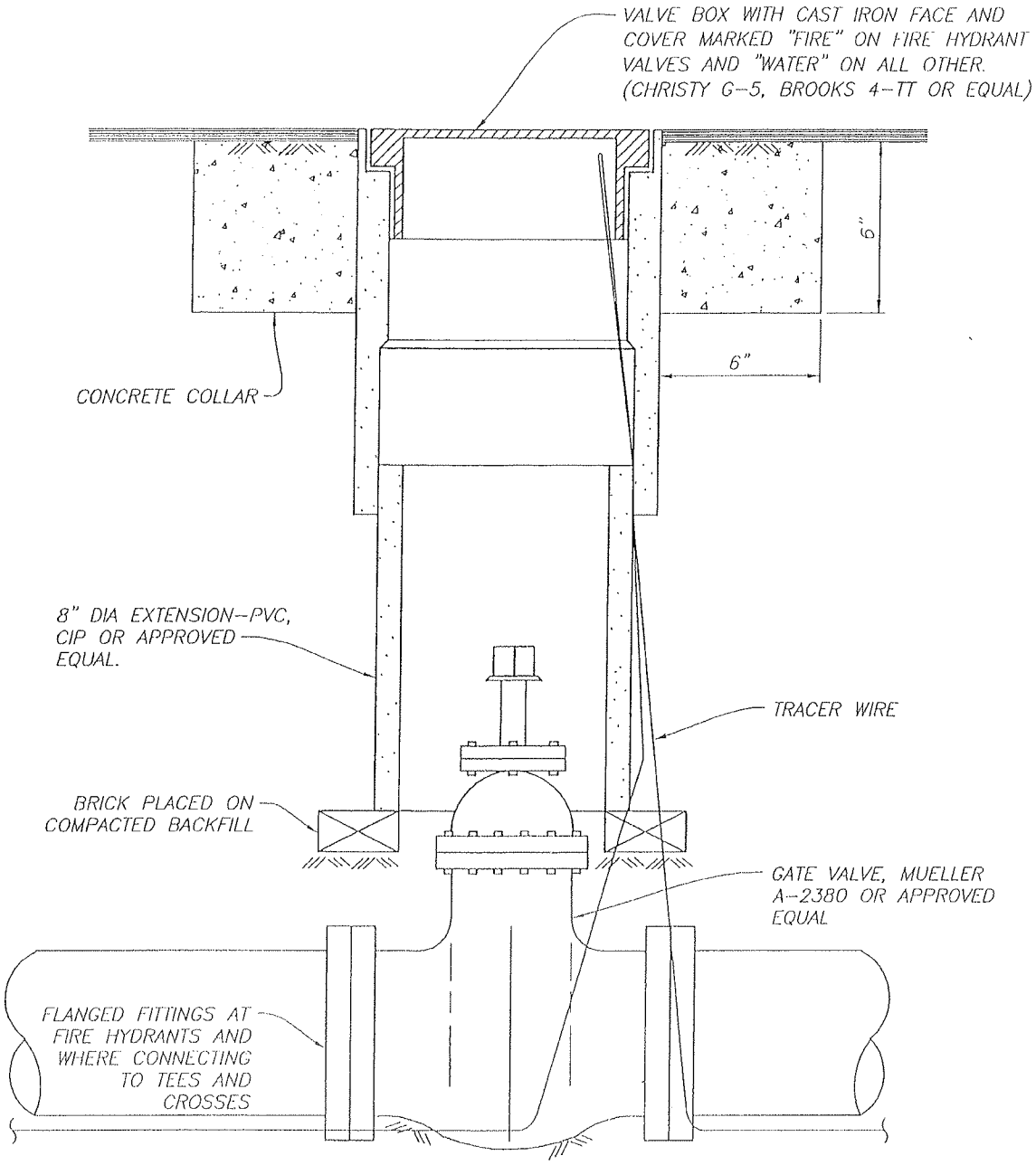

NOTES:

1. SAME INSTALLATION APPLIES TO BUTTERFLY VALVES.
2. IF DISTANCE FROM TOP OF OPERATING NUT TO VALVE BOX COVER EXCEEDS 3'-0", INSTALL OPERATING NUT EXTENSION TO WITHIN 2'-0" OF VALVE BOX COVER.
3. OPERATING NUT EXTENSION SHALL BE APPROVED BY THE DIRECTOR.

CITY OF PATTERSON IMPROVEMENT STANDARDS

CITY OF PATTERSON INCORPORATED 1919

WATER LINE GATE VALVE ASSEMBLY

APPROVED BY: Michael Willett DATE: 03/26/2007

DRAWING NO. 5 - F

Mar 01, 26 ...:37pm
S:\LB15\Library\Details\City of Patterson\5 - F.dwg

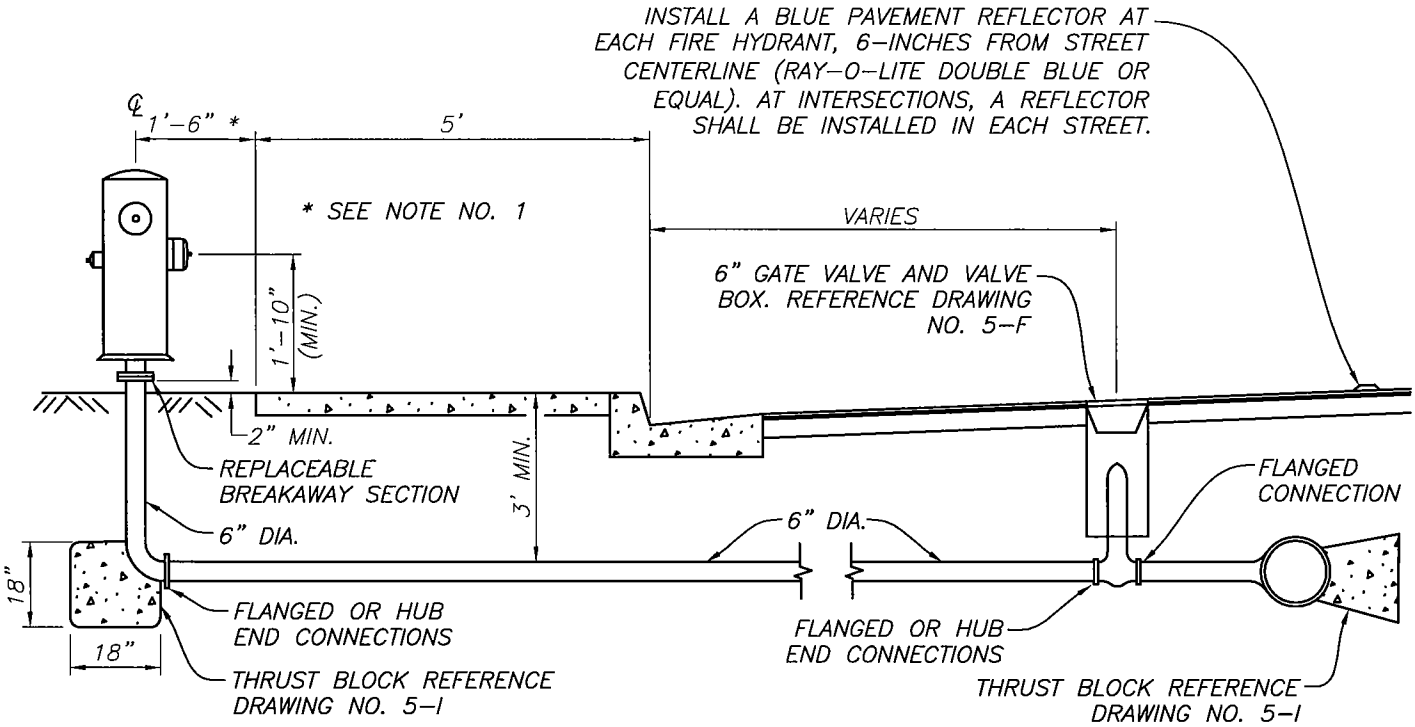

NOTES:

1. FIRE HYDRANT LOCATION SHOWN IS FOR 5-FOOT ATTACHED CURB AND SIDEWALK. FOR ATTACHED CURB AND SIDEWALK 7-FOOT IN WIDTH OR WIDER AND FOR SEPARATED CURB AND SIDEWALK CENTER FIRE HYDRANT 2'-6" BEHIND FACE OF CURB.
2. FACE 4-½ INCH OUTLET PERPENDICULAR TO GUTTER LINE.
3. HYDRANTS SHALL BE CLOW MODEL 960 OR APPROVED EQUAL.

CITY OF PATTERSON IMPROVEMENT STANDARDS

CITY OF PATTERSON INCORPORATED 1919

FIRE HYDRANT ASSEMBLY

APPROVED BY: Ignacio Lopez DATE: 8-3-04

DRAWING NO. 5 - G

Jul 26, 2004 - 10:19am \\Server_1\D\Library\Details\City of Patterson\5 - G.dwg

A

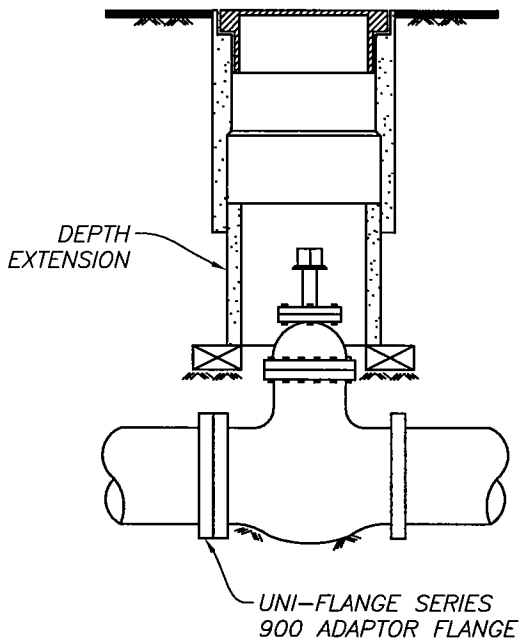

GATE VALVE

NOTES:

MATERIALS:

1. 2" GATE VALVE MUELLER A2380 WITH 2" HUB NUT
2. ALL FITTINGS SHALL BE BRASS
3. OLYMPIC 66 C.I. TAPPED PLUG 2"

INSTALLATION REQUIREMENTS:

4. CUL-DE-SAC INSTALL
   A. STANDARD BLOW-OFF ASSEMBLY (B & C).
   B. FIRE HYDRANT END OF LINE, NO BLOW-OFF REQUIRED.
5. END OF WATER MAINS
   A. TO BE EXTENDED LATER - INSTALL GATE VALVE AND BLOW-OFF RISER (A & C).
   B. NOT TO BE EXTENDED - INSTALL BLOW-OFF ASSEMBLY (B & C)
6. INSTALL SERIES 1350 JOINT RESTRAINTS AS RECOMMENDED BY UNI-FLANGE OR DESIGN ENGINEER.

B

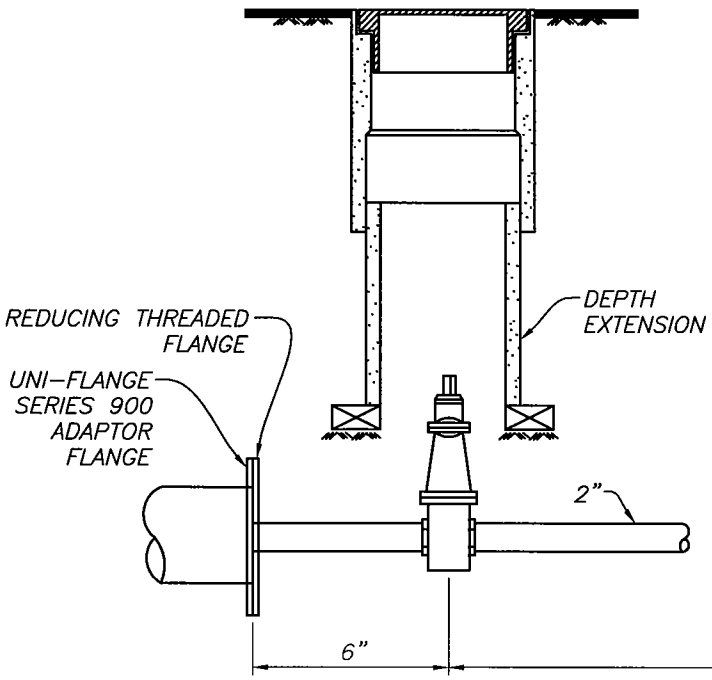

BLOW-OFF VALVE

C

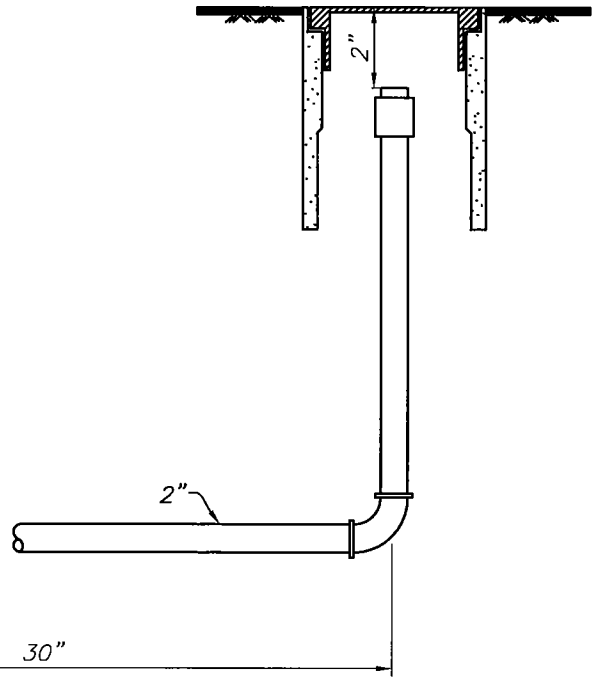

BLOW-OFF RISER

BLOW OFF VALVE ASSEMBLY

CITY OF PATTERSON IMPROVEMENT STANDARDS

CITY OF PATTERSON INCORPORATED 1919

WATER LINE BLOW-OFF ASSEMBLY

APPROVED BY: Ignacio Lopez DATE: 8-30-01

DRAWING NO. 5 - H

Feb 13, 2003 - 4:38pm \\Server_1\D\Library\Details\City of Patterson\02-20-02 DETAILS\5 - H.dwg

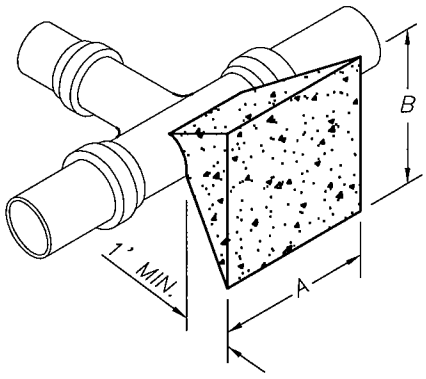

TYPICAL THRUST BLOCK
TEE OUTLET

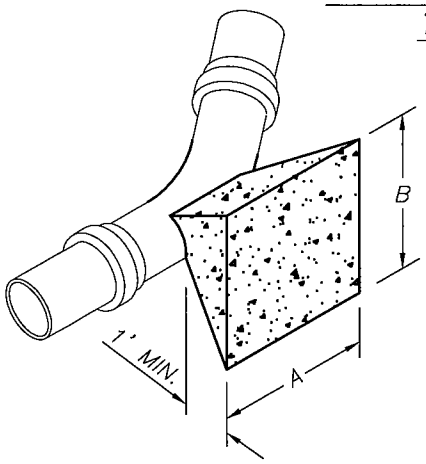

TYPICAL THRUST BLOCK
CAST IRON BEND

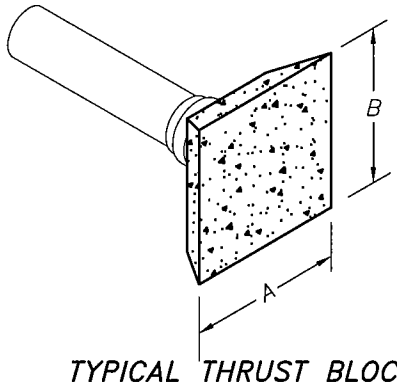

TYPICAL THRUST BLOCK
DEAD END

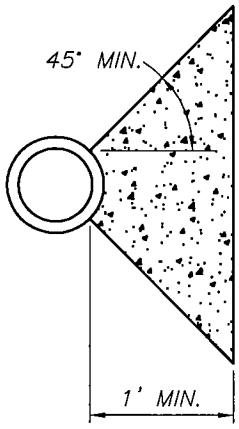

TYPICAL SECTION THROUGH
THRUST BLOCK

THRUST BLOCK AREA REQUIRED		
FITTINGS	ALLOWABLE SOIL BEARING VALUE	
	1,500 LBS. PER SQ. FT.	
6" LINE	"A"	"B"
22-½°	1'-6"	1'-0"
45°	2'-0"	1'-3"
90°	3'-0"	1'-6"
TEE OUTLET	2'-0"	1'-6"
DEAD END	2'-0"	1'-6"
8" LINE	"A"	"B"
22-½°	1'-6"	1'-6"
45°	2'-6"	1'-6"
90°	4'-0"	2'-0"
TEE OUTLET	2'-9"	2'-0"
DEAD END	2'-9"	2'-0"
10" LINE	"A"	"B"
22-½°	2'-3"	1'-6"
45°	3'-0"	2'-0"
90°	5'-0"	2'-6"
TEE OUTLET	3'-3"	2'-6"
DEAD END	3'-3"	2'-6"
12" LINE	"A"	"B"
22-½°	2'-6"	2'-0"
45°	4'-0"	2'-6"
90°	6'-0"	3'-0"
TEE OUTLET	4'-0"	3'-0"
DEAD END	4'-0"	3'-0"

NOTE:

1. ALL VALUES SHOWN ARE MINIMUM FOR A HYDROSTATIC PRESSURE OF 150 P.S.I. AND A SOIL RESISTANCE OF 1,500 LBS./SQ. FT. WITH A MINIMUM PIPELINE COVER OF 2'-6".
2. REDUCTION OF THE THRUST BLOCK SURFACE AREA WILL BE CONSIDERED UPON SUBMITTAL OF APPROVED SOIL BEARING TEST RESULTS GREATER THAN 1,500 LBS./SQ. FT.
3. ALL THRUST BLOCKS SHALL BE POURED AGAINST UNDISTURBED SOIL.
4. THRUST BLOCKS SHOWN ARE FOR HORIZONTAL THRUST RESTRAINT. FOR VERTICAL THRUST RESTRAINT, DETAILS SHALL BE PROVIDED BY DESIGN ENGINEER.

CITY OF PATTERSON IMPROVEMENT STANDARDS

CITY OF PATTERSON INCORPORATED 1919

THRUST BLOCK DETAILS

APPROVED BY: Ignacio Lopez DATE: 2-3-04

DRAWING NO. 5 - 1

Feb 13, 2003 - 4:38pm \\Server_1\D\Library\Details\City of Patterson\02-20-02 DETAILS\5 - 1.dwg

NOTE

TRENCHES NOT IN PAVED AREAS SHALL BE RESTORED TO MATCH EXISTING SURFACE CONDITIONS.

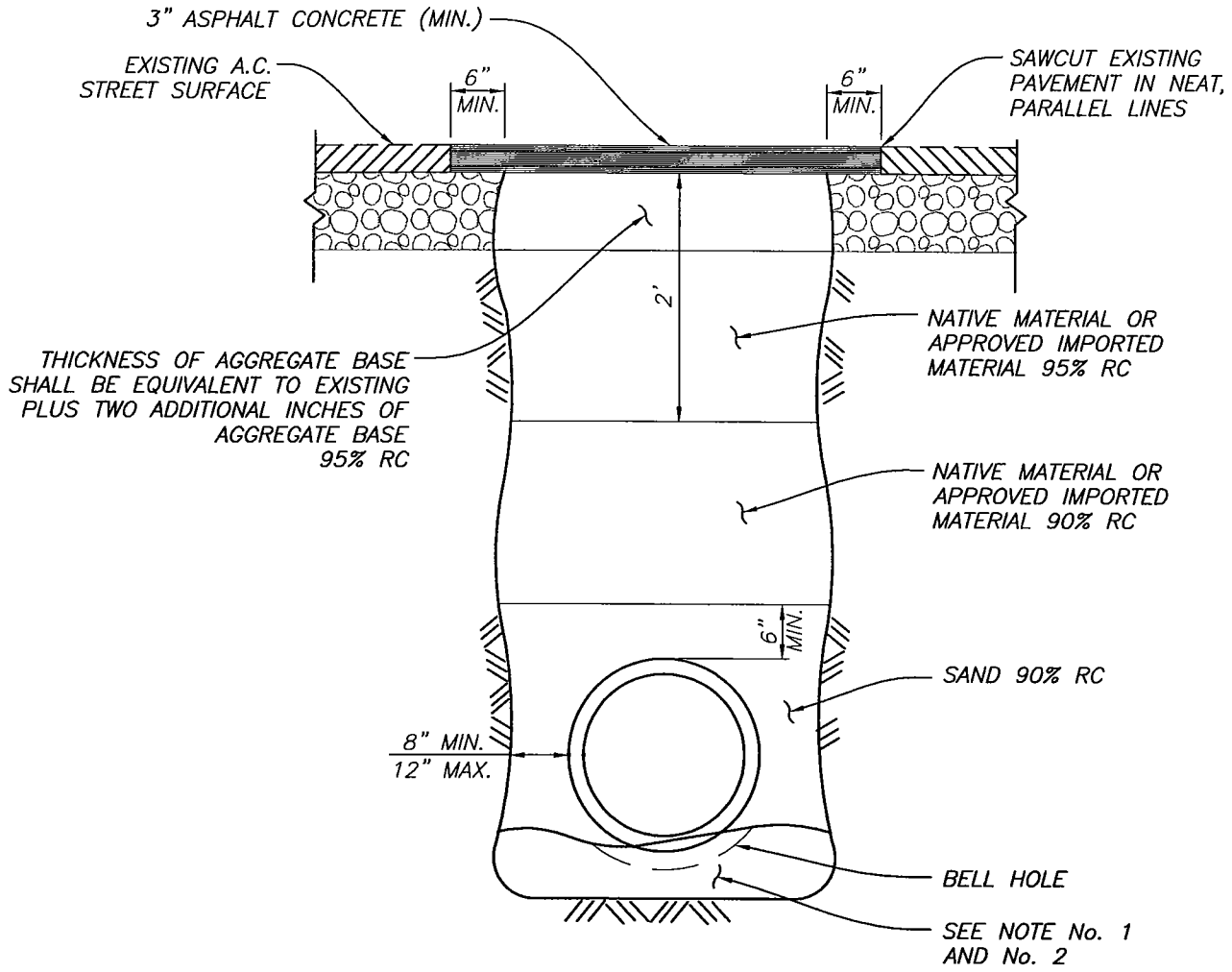

NOTES:

1. IF BOTTOM OF TRENCH IS SOFT OR UNSTABLE, IT SHALL BE OVEREXCAVATED A MINIMUM OF 1 FOOT BELOW GRADE AND BACKFILLED WITH APPROVED IMPORTED MATERIAL.

2. FOR PVC PRESSURE PIPE PROVIDE 4 INCHES OF SAND BEDDING.

3. SAND SHALL CONFORM TO THE FOLLOWING GRADING REQUIREMENTS:

SIEVE SIZE	PERCENTAGE PASSING
#4	100
#16	0–70
#30	0–15
#200	0–5

CITY OF PATTERSON IMPROVEMENT STANDARDS

WATER LINE TRENCH DETAIL

APPROVED BY: Ignacio Lopez DATE: 7-20-04

DRAWING NO. 5 - J

Jul 26, 2004 - 2:26pm \\Server_1\D\Library\Details\City of Patterson\5 - J.dwg

SECTION 6 – NON POTABLE WATER

SPECIFICATIONS:

6.1 GENERAL 6-1
6.2 DESIGN SUBMITTALS 6-1
6.3 DESIGN 6-1
6.4 PIPE DESIGN 6-1
6.5 PIPE 6-3
6.6 FITTINGS 6-3
6.7 VALVES AND VALVE BOXES 6-3
6.8 SERVICES 6-4
6.9 TRENCH EXCAVATION 6-4
6.10 WATER IN TRENCH 6-5
6.11 LAYING AND JOINTING OF PIPE 6-5
6.12 HANDLING OF PIPE ACCESSORIES 6-5
6.13 SERVICE INSTALLATION 6-6
6.14 TEMPORARY AND PERMANENT BLOW-OFFS 6-6
6.15 CONNECTION WITH EXISTING WATERLINES 6-6
6.16 INSPECTION 6-7
6.17 BEDDING AND BACKFILL OF TRENCHES 6-8
6.18 RESTORING SURFACE 6-8

SECTION 6

NON POTABLE WATER

6.1 GENERAL

The City operates and maintains a non potable distribution system for landscape irrigation of commercial, industrial, public grounds and parks. Developments within the City where it has been determined that non potable water will be used or used in the future, will install non potable facilities.

These Improvement Standards apply to all public water facilities designed for installation within public right-of-way (ROW) or public utility easements (PUE) in the City and are limited to mains and services 12 inches or less in diameter. Standards and requirements for larger sizes will be determined by the City Engineer.

Non potable facilities shall be designed in accordance with acceptable engineering principles; California Code of Regulations Title 22, Division 4; Department of Water Distribution and Transmission Health Guidance Manual for Cross Connection Control; California Code of Regulations Title 17, Division 1, Chapter 5 and these Improvement Standards.

6.2 DESIGN SUBMITTALS

Prior to submittal of Improvement Plans for the first phase of construction, a master water plan for the entire development shall be submitted to the City Engineer for review and approval. The plan shall include water flow and pressure calculations.

6.3 DESIGN FLOWS

Non potable water demands/flows shall be determined on a case by case basis by the City Engineer.

6.4 PIPE DESIGN

The minimum size pipe used shall be 6 inches. Larger water lines may be required based on service demand or planned extension of the City's distribution/transmission system.

The Hazen-Williams formula shall be used to calculate design flow, pressure loss, velocity and pipe diameter relationships. The coefficient of friction, "C", shall be 130.

There are no slope requirements for water mains. However, inverts and pipe slopes shall be shown on the profile sheets of the Improvement Plans.

All high points within the system shall be furnished with air release valves.

The minimum cover over mains shall be 5 feet 6 inches in both paved and unpaved areas. Where potable and non potable water mains are installed in the same street or easement, the top of the non potable main shall be at least 12 inches below the bottom of the potable water main. When crossing other laterals including non potable laterals, the Engineer shall indicate on the plans the elevation of the top of the non potable waterline and the elevation of the bottom of the utility line or visa versa.

Permanent easements shall be provided on all mains not located in public rights-of-way. The minimum easement width shall be 20 feet. The main shall be located in the center of the easement unless otherwise required by the Director.

Water mains shall not be placed in easements across low density or medium density residential lots.

A minimum horizontal clearance of 4 feet shall be maintained between non potable water mains and potable water mains unless otherwise approved by the City Engineer. Horizontal separation shall be in accordance with the Department of Health Services criteria for separation between water mains and non potable pipelines.

Curved water mains are allowed; however, joint deflection or pipe curvature shall not exceed the pipe manufacturer's recommendations.

Valves on mains shall be spaced and located in conformance with the following criteria:

1. Water mains shall be valved on each side of railroad, highway and canal right-of-way crossings. (These valves shall be located outside of the right-of-way being crossed unless otherwise approved by the City Engineer.)

2. At all branches or intersections of mainlines in each direction from such branches or intersections, unless otherwise approved by the City.

3. A minimum, every 2,500 feet of continuous mainline 12 inches in diameter or larger and every 1,000 feet of continuous mainline 10 inches in diameter or smaller.

The valving requirements mentioned above are minimum. Additional valves may be required.

6.5 PIPE

The following standard pipe materials shall be used for water main construction and shall conform to the latest edition of appropriate American Water Works Association (AWWA) Standards:

Pipe Materials	Standard
Ductile Iron	AWWA C151
w/Cement Mortar Lining & Seal (std. thickness)	AWWA C104
Polyethylene Encasement	AWWA C105
PVC (iron pipe O.D.)	AWWA C900, DR 18 (Class 150) minimum

PVC waterlines shall be purple in color. All ductile iron pipe shall be polyethylene encased per AWWA C105. Encasement shall be purple in color.

All water mains and services from the main to the meter shall be installed with 12 gauge TW single strand tracer wire.

6.6 FITTINGS

Bends, tees and other fittings shall be ductile iron conforming to AWWA C153.

Fittings shall be furnished with a joint type suitable for attaching to valves or other pressure pipe. Adaptor gaskets are not acceptable. Thrust blocking shall be constructed at bends, tees, dead-ends and where changes in pipe diameter occur. Blocking shall be made of Class 3 concrete, and shall be placed between undisturbed ground and the fitting to be anchored. The area of bearing on the pipe and on the ground shall be that required by Drawing No. 5-I. The blocking shall be placed so that the joints of the pipe and fittings will be accessible for repair.

Fittings shall receive a band of purple colored tape applied circumferentially at the ends of the fittings adjacent to connections to the adjoining pipe sections. The identification tape shall also be used to secure the polyethylene wrap.

6.7 VALVES AND VALVE BOXES

Valves and valve boxes shall be installed at the locations shown on the plans.

All valves shall be Dresser "450" or resilient seated gate valve or Mueller A-2380 gate valve, or approved equal, and shall be the rubber-seated, tight-closing type conforming to the current AWWA Standard C-509. Valves shall open left and be equipped with a 2-inch AWWA approved operating nut.

Valve boxes shall be Christy G5 with Christy Iron Cover or approved equals. All valve boxes shall be installed to finished grade as per Drawing No. 5-F.

Valves shall receive a band of purple colored tape applied circumferentially at the ends of the fittings adjacent to connections to the adjoining pipe sections and to the operator portions of the valves.

Valve boxes shall be Christy G5 with Christy Iron Covers or approved equal. Lids shall be embossed with the inscription "NON POTABLE WATER." All lids shall be factory painted purple.

6.8 SERVICES

All water services shall be metered.

Size of service is to be determined by the Design Engineer for the parcel being served. (Minimum size is 1-inch.) For City maintained landscape areas, parks and detention basins, minimum water service sizes are as follows:

Parcel Size	Waterservice
Parcels less than 1.5 acres	2-inch
1.5 acres - 4.5 acres	3-inch
4.5 acres - 9.5 acres	4-inch
Parcel greater than 9.5 acres	To be determined

6.9 TRENCH EXCAVATION

The Contractor shall, prior to beginning construction, obtain from the Division of Industrial Safety the permit required by California Labor Code, Section 6500, and pay any fee charged for such permit. In addition thereto, whenever the work under the Contract involves trench excavation 5 feet or more in depth, the Contractor shall submit for approval to a registered civil or structural engineer representing the City, in advance of excavation, a detailed plan showing the design of shoring, bracing, sloping, or other provisions to be made for worker protection from the hazard of caving ground during the excavation. If such plan varies from the shoring system standards established by the Construction Safety Orders of the Division of Industrial Safety, the plan shall be prepared by a registered civil or structural engineer. Nothing in this section shall be deemed to allow the use of shoring, sloping or other protective system less effective than that required by the Construction Safety Orders. Nothing in this section shall be construed to impose tort liability on the City, City Engineer, or any of their officers, agents or employees.

The pipe trench shall be dug with side walls sloped or otherwise supported in a safe manner in accordance with the Department of Industrial Relations, Division of Occupational Safety and Health Administration regulations pertaining to trenching.

Excavated material shall be placed on only one side of the trench unless otherwise directed. Separation distance between piles of excavated material and trench shall be consistent with the Construction Safety Orders.

The alignment and grade for the bottom of the trench shall be properly established before the trench is excavated and shall be approved by the City before the pipe is laid. Trenches shall be true to line and grade, and the bottom shall be even and free from all objectionable material.

6.10 WATER IN TRENCH

When water is encountered in the trench, it shall be removed by draining or by pumping. Should water get into the trench before the pipe is laid, the laying of pipe shall be postponed until the trench has dried sufficiently to provide a firm foundation for the pipe or else, the mud or softer material shall be removed and grade re-established by backfilling and compacting with suitable material as determined by the City.

6.11 LAYING AND JOINTING OF PIPE

Laying and jointing of pipe shall be in accordance with the manufacturer's recommendations and as approved by the City. Joint deflections shall not exceed 80% of the maximum recommendations of the manufacturer.

Where rubber gaskets are used for jointing pipe, a feeler gauge shall be used to check the position of the rubber gasket upon each closure. The interior of the pipe shall be cleared of all debris, and exposed pipe ends shall be closed by a suitable pipe plug when pipe laying is not in progress.

The pipe shall be laid on a trench bottom shaped to provide adequate and uniform support of the pipe except at coupling or bell holes. The use of prepared mounds to facilitate laying of the pipe is not approved.

Where pipe is to be encased or have concrete bedding, suitable concrete blocks shall be used to support the pipe in the proper location while placing concrete.

6.12 HANDLING OF PIPE ACCESSORIES

Proper implements, tools, and facilities satisfactory to the City shall be provided and used by the Developer or Contractor for the safe and efficient execution of the work. All pipe, fittings, valves, hydrants and accessories shall be lowered into the trench in such a manner as to prevent damage to pipe fittings. Under no

circumstances shall pipe or accessories be dropped or dumped into the trench. All foreign matter or dirt shall be removed from the interior of pipe before lowering into position in the trench. Pipe shall be kept clean by means approved by the City Engineer during and after laying. All pipe and accessories shall be inspected for defects prior to lowering into trench. Any defective, damaged or unsound pipe or accessory shall be repaired or replaced at the Developer's or Contractor's expense.

6.13 SERVICE INSTALLATION

The services shall be installed per Drawings No. 5-A, 5-B and 5-C.

Service laterals that are not available in the color purple shall be identified in the field as non potable water by means of utility identification tape applied to the tubing or lateral. Services larger than 2 inches in diameter shall be polyethylene encased. (Encasement color shall be purple.)

Meter box lids shall be identified in the field by means of Christy's Model No. 3800 Recycled/Reclaimed Water Nameplates or be factory painted purple. In addition, meters or meter valves shall be identified as non potable by Christy's tag ID.MAX.PZ.RC006 or equal.

6.14 TEMPORARY AND PERMANENT BLOW-OFFS

Temporary and permanent blow-offs shall be installed at the locations shown on the plans in conformance with Drawing No. 5-H unless otherwise required by the City Engineer. The final length of pipe, prior to the blow-off, shall be 18 to 39 inches.

All salvaged temporary blow-offs shall become the property of the Developer or Contractor and shall be removed from the job site before completion.

6.15 CONNECTION WITH EXISTING WATERLINES

The Contractor shall make all connections to existing lines in the presence of the City. City personnel shall be the only ones to open or close existing water valves.

Connections shall be made at such times as designated by the City and in such a manner as to insure the least inconvenience to water users. No connection shall be made until the new work has been tested and disinfected, if required, as specified hereinafter. The Contractor shall be responsible for safeguarding the existing system from all damage and possible contamination in the performance of his work.

If connecting to an existing line carrying potable water, the Contractor shall use an approved double check backflow preventor between the existing main and the new line for testing and disinfection purposes.

6.16 INSPECTION

1. All water lines shall be inspected for proper installation by the City Engineer, prior to backfilling of trenches.

2. HYDROSTATIC TEST

After installing pipe and prior to complete backfilling of trenches, the entire length of each line shall be subjected to a hydrostatic pressure of not less than 150 psi for a period of not less than 2 hours. Curb stops, idler fittings and fire hydrant units shall also be included in the hydrostatic test. No pipe installation will be accepted if leakage for the section is greater than the allowable leakage determined by using one of the following formulas, as applicable:

$$\text{For Polyvinyl Chloride Pipe - } L = \frac{ND\sqrt{P}}{7400}$$

(L = Allowable leakage in gallons per hour. N = Number of joints in length of pipeline. D = Nominal diameter of the pipe in inches. P = Average test pressure in pounds per square inch.), or

$$\text{For Ductile Iron Pipe - } L = \frac{SD\sqrt{P}}{133{,}200}$$

(L = Allowable leakage in gallons per hour. S = Length of pipe tested in feet. D = Nominal diameter of the pipe in inches. P = Average test pressure in pounds per square inch.)

Water for testing may be taken from the nearest blow-off, fire hydrant or other approved source. All pipe, fittings, valves, couplings, and other materials needed to fill the test lines with water shall be supplied and installed by the Developer or Contractor. Care shall be taken not to contaminate the existing system.

The pump, gauge, pipe connection, and all necessary apparatus and equipment needed for the test shall be supplied by the Developer or Contractor.

The Developer or Contractor shall permanently stop all leaks. After repairing all defective items, the line shall be tested again to determine final acceptability of the installation.

3. DISINFECTING WATER MAINS

Water mains, requiring disinfection, shall be disinfected in conformance with the procedure specified in the current standards for AWWA C651 "Disinfecting Water Mains" or other procedure satisfactory to the City Engineer. Only one connection shall be made between the existing City system and the system being disinfected unless otherwise approved by the Director. A temporary backflow prevention device as approved by the Director shall be installed between the two systems. Upon successful completion of the disinfection process, the temporary backfill prevention device shall be removed.

Chlorine shall be introduced into the lines at service connections or at such locations along the line that uniform distribution of chlorine throughout the line is ensured, including services, fire hydrants and stubs.

After final fleshing, a testing laboratory, approved by the Director, shall take two consecutive sets of water samples from the system at least 24 hours apart. All samples shall be drawn from locations designated by and in the presence of the Director.

The system must pass both consecutive negative bacteriological tests prior to removal of the backflow prevention device.

Valves or other connections between the existing system and new system shall not be opened or completed until certification of the passing bacteriological tests have been received and reviewed by the Director.

The Contractor shall be responsible for all testing costs.

6.17 BEDDING AND BACKFILL OF TRENCHES

Bedding and backfill shall be as shown on Drawing No. 5-J.

6.18 RESTORING SURFACE

The surface of all trenches shall be filled and compacted so that the surface will conform to the condition of the surrounding ground. The repaving requirements of the plans shall be met regardless of type of existing surfacing.

Existing pavement shall be cut in neat parallel lines as shown on Drawing No. 5-J.

Aggregate base shall be Class II compacted to 95% relative compaction. Aggregate base shall have 3/4-inch maximum combined grading.

Asphalt concrete shall be Type B, AR 8000 with 1/2-inch maximum aggregate, medium grading.

A paint binder of asphaltic emulsion shall be applied to all surfaces in conformance with Section 39-4.02 of the State Standards.

SECTION 7 - SEWER

SPECIFICATIONS:

7.1 GENERAL 7-1
7.2 DESIGN SUBMITTALS 7-1
7.3 DESIGN 7-1
7.4 PIPE FOR SEWER MAINS 7-4
7.5 SERVICES 7-4
7.6 MANHOLES 7-4
7.7 LIFT STATIONS 7-5
7.8 FORCE MAINS 7-6
7.9 TRENCH EXCAVATION 7-6
7.10 WATER IN TRENCH 7-7
7.11 LAYING AND JOINTING OF PIPE 7-7
7.12 LATERAL CONNECTIONS 7-8
7.13 BACKFILL 7-8
7.14 CLEANING AND FLUSHING 7-9
7.15 INSPECTION 7-9
7.16 CLOSED CIRCUIT TV INSPECTION 7-10
7.17 GREASE INTERCEPTORS 7-11

DRAWINGS:

7A SANITARY SEWER MANHOLE
7B SANITARY SEWER DROP MANHOLE
7C CAST IRON MANHOLE FRAME AND COVER
7D SANITARY SEWER CLEANOUT
7E 4-INCH SEWER SERVICE
7F 4-INCH SEWER SERVICE CLEANOUT
7G FLEXIBLE WALL PIPE BACKFILL
7H RIGID WALL PIPE BACKFILL

SECTION 7

SEWER

7.1 GENERAL

Sewers shall be installed by a Developer or Contractor holding the appropriate license for such work under the provisions of the State of California Business and Professions Code. All sewer lines shall conform to the Department of Health Regulations and California Code of Regulations.

7.2 DESIGN SUBMITTALS

Prior to submittal of Improvement Plans for the first stage of construction, a master sanitary sewer plan for the entire development shall be submitted to the City Engineer for review and approval. The plan shall include the following:

- A plan with a scale of 1" to 100' showing the proposed system, preliminary pipe sizes, tributary sub-areas and existing and future tributary areas outside the project area.
- Design flow at major junction points.
- A description and preliminary sketch of any pump stations. This information shall include number and size of pumps, wet well volumes and operating levels.

7.3 DESIGN

Unless specific sanitary sewer discharges are required or approved by the City, the following sewage discharges shall be used for design of residential developments:

Residential Development	Average Flow
Single Family - Detached	300 gpud
Single Family - Attached	300 gpud
Multi Family - 2-4 Units	250 gpud
Multi Family - 5 Units or More	200 gpud

gpud = gallons per unit per day

For commercial, industrial and other types of development, anticipated sewage discharges shall be determined using typical discharge information from similar facilities.

Peak flow shall be obtained by multiplying the average flow by the peaking factor. The peaking factor is 3.0 for commercial flows and 2.0 for industrial flows.

Peaking factors for residential flow shall be selected from the following figure based upon total upstream average flow.

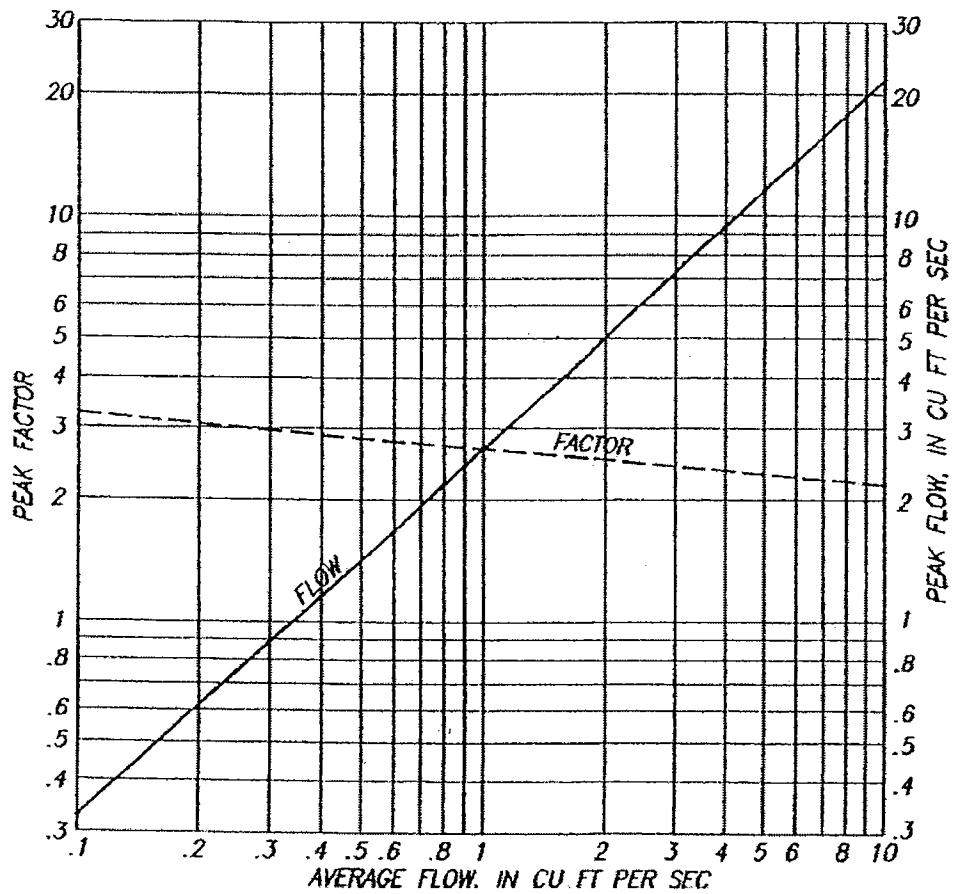

Sanitary sewer calculations shall be submitted to the City Engineer for review.

The minimum size pipe used for gravity sanitary sewer mains shall be 6 inches in diameter.

Minimum slopes for sewer lines are as follows:

Diameter (inches)	Minimum Slope (ft/ft)
6	.0049
8	.0034
10	.0025
12	.0019
15	.0014
18	.0011
21	.0009
24	.0008

The above slopes are intended to provide velocities of not less than 2.0 feet per second when flowing full based on Manning's equation utilizing an "**n**" value of 0.13.

If it is impractical to meet these velocity standards, the minimum slopes can be waived by the City Engineer.

Maximum velocity shall not exceed 10 feet per second. The slope of sewer lines between manholes shall be constant.

The minimum cover for sanitary sewer lines, unless otherwise approved by the City Engineer, shall be 3 feet 6 inches from the existing or planned final grade, whichever is lower, to the top of the sewer pipe. Where the preceding minimum cover cannot be provided, the City Engineer may require submittal of pipe load calculations and structural design.

When crossing a water main, it is desirable that the sewer line be installed below the water main with a minimum clearance of 12 inches. If the desired clearance cannot be maintained, the sewer line shall be designed in accordance with the requirements of the California Department of Health Services for separation between water mains and sanitary sewers. A minimum vertical clearance of at least 3 inches shall be maintained between a sewer line and a storm drain.

At points of convergence of sewer pipes of the same size, the invert of the incoming pipe shall be a minimum of 0.1 feet higher than the outflowing pipe. (This 0.1 foot of elevation difference does not apply for laying of pipe through a manhole.) Under no circumstances shall the crown of the incoming pipe be below the crown of the outflowing pipe.

Sanitary sewer pipes shall be placed within street rights-of-way unless placement in an easement is specifically approved by the City Engineer. Alignment shall be parallel to the street centerline whenever possible.

Permanent easements shall be provided for all mains not located in public rights-of-way. The minimum easement width shall be 15 feet. Wider easements may be required by the Director for any lines over 12 inches in width or with an invert elevation 5 feet or greater below ground line. The line shall be located in the center of the easement unless otherwise required by the Director.

A minimum horizontal clearance of 10 feet shall be maintained between sewer lines and water mains, unless otherwise approved by the City Engineer. If the 10 foot separation is waived, the requirements of the California State Department of Health Services for separation between water mains and sanitary sewers shall be adhered to.

7.4 PIPE FOR SEWER MAINS

The following standard pipe materials shall be used for gravity sewer construction and shall conform to the latest edition of American Society of Testing Materials standards (ASTM Standards).

Pipe Material	Standard
PVC (Std. Wall)	ASTM D3034
PVC Large Diameter	ASTM F679
PVC Large Diameter Ribbed	ASTM F794
Vitrified Clay	ASTM C700

7.5 SERVICES

In general, only one sanitary service is allowed per parcel served. Additional services may be approved by the City Engineer in order to eliminate the need for on-site lift stations or monitoring requirements.

The minimum diameter for services (sewer laterals) shall be 4 inches.

A sewer lateral installed concurrently with a main sewer shall be of the same type and class of pipe material as the sewer main with the following exceptions:

- Where PVC pipe is utilized, services shall conform to ASTM D-3034, SDR-26.
- Where cover or water main separation require otherwise.

7.6 MANHOLES

Manholes shall be placed at the intersections of all sewer mains and/or laterals 6 inches in diameter or larger and at sections where changes in slope, pipe size, or pipe alignment occur. In addition, manholes shall be installed at the upstream

ends of all mains. (Temporary cleanouts may be utilized at the upstream ends of mains intended for extension if approved by the City Engineer.)

Manholes shall have a maximum spacing of 350 feet on 6 inch and 8 inch mains and 450 feet on mains 10 inches and larger.

Manholes shall have an inside diameter of 4 feet when the largest pipe entering or exiting the manhole is less than 24 inches in diameter. Where the nominal pipe diameter is 24 inches or larger, the inside diameter of the manhole shall be 5 feet.

Drop manholes shall be provided wherever the invert of the incoming pipe is higher than 2 feet above the invert of the outflowing pipe.

7.7 LIFT STATIONS

Lift stations shall be specifically approved by the City Engineer. The lift station shall be of the wet well - dry well arrangement and shall be provided with fencing, paved access as required in Section 8.17 of these standards and potable water for cleaning purposes.

The following criteria shall be used for design:

- Wet well capacity shall be adequate to provide a minimum pump cycle time of 10 minutes.
- Wet wells shall be reinforced concrete with a polyurethane lining.
- A stainless steel debris basket with a stainless steel slide rail system shall be provided on the wet well influent pipe.
- Aluminum access frames and covers shall be provided for the wet well.
- Dry well shall be Smith and Loveless Custom Series with a steel shell. Minimum diameter of the wet well shall be 8 feet.
- Dry wells shall be protected from corrosion through usage of an anode current cathodic protection system designed by a corrosion specialist certified by the National Association of Corrosion Engineers (N.A.C.E.). Minimum anode life shall be 20 years.
- Two non-clog sewer pumps, each capable of pumping 100% of the design flowrate, shall be provided.
- A TESCO 24-200 LB service pedestal with a Liquitronics III-SL sump level control monitor shall be provided. Contactors for high level alarm and power failure shall be provided in the telemetry

portion of the cabinet. Monitoring of the pump station shall be integrated into the City's SCADA system.

- Manual power transfer switch and a receptacle with closing plug shall be provided to allow connection of an emergency power generator.

- Provide a pole mounted yard light and alarm light.

7.8 FORCE MAINS

Force main piping shall be sized to provide a minimum velocity of 2 feet per second at the design flowrate of the lift station.

The following standard pipe materials shall be used for force main construction and shall conform to the latest edition of applicable AWWA Standards:

Pipe Materials	Standard
Ductile Iron	AWWA C151
W/Cement Mortar Lining & Seal (std thickness)	AWWA C104
Polyethylene Encasement	AWWA C105
PVC (iron pipe O.D.)	AWWA C900, DR 18 (Class 150) minimum

There are no slope requirements for force mains. However, inverts and pipe slopes shall be shown on the profile sheet of the Improvement Plans.

Force mains shall enter the gravity sewer system through a manhole. The invert of the force main shall be 1 foot above the flow line of the outflow pipe. Cleanouts or automatic air release valves as required by the City Engineer shall be provided.

7.9 TRENCH EXCAVATION

The Contractor shall, prior to beginning construction, obtain from the Division of Industrial Safety the permit required by California Labor Code, Section 6500, and pay any fee charged for such permit. In addition thereto, whenever the work under the Contract involves trench excavation 5 feet or more in depth, the Contractor shall submit for approval to a registered civil or structural engineer representing the City, in advance of excavation, a detailed plan showing the design of shoring, bracing, sloping, or other provisions to be made for worker protection from the hazard of caving ground during the excavation. If such plan varies from the shoring system standards established by the Construction Safety Orders of the Division of Industrial Safety, the plan shall be prepared by a registered civil or structural engineer. Nothing in this section shall be deemed to allow the use of shoring,

sloping or other protective system less effective than that required by the Construction Safety Orders. Nothing in this section shall be construed to impose tort liability on the City, City Engineer, or any of their officers, agents or employees.

The pipe trench shall be dug with side walls sloped or otherwise supported in a safe manner in accordance with the Department of Industrial Relations, Division of Occupational Safety and Health Administration regulations pertaining to trenching.

Excavated material shall be placed on only one side of the trench unless otherwise directed. Separation distance between piles of excavated material and trench shall be consistent with the Construction Safety Orders.

The alignment and grade for the bottom of the trench shall be properly established before the trench is excavated and shall be approved by the City before the pipe is laid. Trenches shall be true to line and grade, and the bottom shall be even and free from all objectionable material.

7.10 WATER IN TRENCH

When water is encountered in the trench, it shall be removed by draining or by pumping. Should water get into the trench before the pipe is laid, the laying of pipe shall be postponed until the trench has dried sufficiently to provide a firm foundation for the pipe or else, the mud or softer material shall be removed and grade re-established by backfilling and compacting with suitable material as determined by the City.

7.11 LAYING AND JOINTING OF PIPE

Laying and jointing of pipe shall be in accordance with the manufacturer's recommendations and as approved by the City. Joint deflections shall not exceed 80% of the maximum recommendations of the manufacturer.

Where rubber gaskets are used for jointing pipe, a feeler gauge shall be used to check the position of the rubber gasket upon each closure. The interior of the pipe shall be cleared of all debris, and exposed pipe ends shall be closed by a suitable pipe plug when pipe laying is not in progress.

The pipe shall be laid on a trench bottom shaped to provide adequate support of the pipe except at coupling or bell holes. The use of prepared mounds to facilitate laying of the pipe is not approved.

Where pipe is to be encased or have concrete bedding, suitable concrete blocks shall be used to support the pipe in the proper location while placing concrete.

7.12 LATERAL CONNECTIONS

Where 4 inch laterals are constructed concurrently with main sewers 15 inches in diameter and less, connections shall be made with a regularly manufactured wye branch. Connection to mains, 18 inches in diameter or larger, shall be at manholes only, unless otherwise approved by the Director. If approval is granted, a City approved wye or tee saddle shall be used. Saddles shall have a skirt to prevent the saddle from entering the sewer main beyond the inside surface of the main, and shall be located so the invert of the saddle branch is at the same elevation as the crown of the main sewer. A neat opening shall then be cut in the main sewer which shall form a snug fit with the spigot of the saddle. The saddle shall then be installed and secured in accordance with the manufacturer's recommendations and, in addition, shall be attached to the main with a minimum of two stainless steel banding straps. The ends of the lateral shall be securely stopped with plugs or caps which can easily be removed without damage to the pipe end. The end of the lateral shall be marked by imprinting an "S" on the curb face over the sewer lateral. All laterals shall be installed prior to air testing.

Lateral connections to existing sewers shall be made at a manhole or wye branch.

Whenever cut-in wyes are utilized that require the usage of rubber couplings, the couplings shall utilize stainless steel shear rings to assist in maintaining proper alignment of the sewer

Where, in the opinion of the Director, it is impractical to connect or to install a manhole or wye branch, the connection shall be made by the use of a tee saddle as described above.

7.13 BACKFILL

After the sewers and appurtenances have been properly constructed and inspected, the trench shall be backfilled and compacted as shown on Drawing No. 7-G for flexible walled pipe and as shown on Drawing No. 7-H for rigid walled pipe.

Compaction tests shall be performed by a testing laboratory approved by the City. The laboratory shall be retained by the Developer and all testing expenses shall be paid by the Developer.

Jetting of backfill will not be allowed except in special cases as approved by the City Engineer.

During the compaction operation, the Contractor must exercise extreme caution so as not to damage or disturb the pipe.

7.14 CLEANING AND FLUSHING

After all backfilling is completed and manhole frames and covers set, but prior to placement of paving material, the Contractor shall clean and flush all sanitary sewer mains.

To clean and flush sewer pipes 12-inches or less in diameter, the Contractor shall furnish and use a heavy rubber ball manufactured for this purpose and approved by the Director. When inflated with air it should have an outside diameter equal to the interior diameter of the pipe to be cleaned. The ball shall be placed in the uppermost structure of the line to be cleaned and then water shall be introduced into the structure in back of the ball. The ball shall pass through the pipe with only the pressure of the water behind it. The rate at which the ball is allowed to pass through the pipe shall be controlled by a rope attached to the ball at all times. This procedure shall be utilized on each section of pipe installed. Care shall be exercised to feed the ball slow enough to allow debris to be removed in a manner acceptable to the Director. The work shall be done in such a manner as to prevent flooding of adjacent properties due to sewage back-up.

Sewer pipes over 12-inches in diameter may be cleaned by means other than the above described ball method, with the approval of the Director.

7.15 INSPECTION

PVC sewer pipe shall be tested after cleaning and flushing using a mandrel or other approved testing device. Maximum deflection shall not exceed 5% of the average inside diameter of the pipe.

For all pipes less than 24-inch (I.D.), a mandrel shall be pulled through the pipe by hand. Prior to use, the mandrel shall be approved by the Director. If the mandrel fails to pass, the pipe will be deemed to be over-deflected.

Any over-deflected pipe shall be re-laid.

Mandrels shall be rigid, nonadjustable, odd-numbering-leg (9 legs minimum), having an effective length not less than its nominal diameter. The minimum diameter of the mandrel at any point along its full length shall be as follows:

Pipe Material	Nominal Size (Inches)	Minimum Mandrel Diameter (Inches)
PVC – ASTM D3034 (SDR35)	6	5.455
	8	7.282
	10	9.085
	12	10.793
	15	13.203
PVC – ASTM F679 (T-1 Wall)	18	16.748
	21	19.744
	24	22.212
	27	25.033
PVC – ASTM F794	18	16.768
	21	19.713
	24	22.325
	27	25.175
	30	28.025

Mandrels shall be fabricated from steel, fitted with pulling rings at each end, and stamped or engraved on some segment, other than the runner, with the pipe material, specifications, nominal size and mandrel O.D.

For pipes with a nominal diameter of 24 inches or larger, deflections shall be determined by a method submitted to and approved by the Director. If a mandrel is selected, the minimum diameter, length and other requirements shall conform to the dimensions and requirements previously stated.

All sanitary sewer lines shall be pressure tested by a low-pressure air test. Each section of PVC pipe shall be tested in accordance with UNI-B-6. VCP shall be tested in accordance with ASTM C828. Any section of sewer pipe failing the air test shall be repaired and retested until leakage is reduced to acceptable leakage.

7.16 CLOSED CIRCUIT TV INSPECTION

Prior to placing the final street surfacing, the Contractor, will inspect all new sewer systems with a closed circuit television system. This will be done after the pipe has been installed true to the prescribed lines and grades, the trench backfilled and compacted, the manhole and cleanout covers set to proper grade, the roadway subgrade compacted, aggregate subbases and bases placed and compacted, and the sewer system cleaned of all debris.

At the start of each sanitary sewer section, the Contractor shall record the manhole location by street intersections the inspection is beginning and ending at. This information shall appear in typewritten letters on the videotape. A gauge shall be attached to and dragged behind the camera to indicate the depth of any standing water within the line. The gauge shall have a diameter of 10% of the pipe diameter being televised.

Pulling of the camera shall be stopped and locations recorded in typewritten letters on the video tape at the following locations:

- The beginning and ending locations of all areas where the depth of standing water exceeds 10% of the pipe diameter.
- All wye locations.
- Any problem areas.

Camera pulling speed shall not exceed 100 ft. per minute.

Videotapes shall be delivered to the Director for his review. The Contractor shall make all necessary repairs and corrections to the pipeline as required by the Director prior to paving.

7.17 GREASE INTERCEPTORS

Grease interceptors shall be constructed by the Developer on private property on the sewer service lateral for any facility whose operation will result in oil, grease, sand or other solids being discharged into the City's sanitary sewer system. (Interceptors or provisions to install future interceptors on all commercial/industrial shell buildings are also required.)

Interceptors shall conform to the latest California Plumbing Code Standards and all grease interceptors shall have a sample point and shall be constructed outside the building where they can be easily inspected for proper operation by the City.

For additional information regarding specific requirements of grease interceptor, contact the Director.

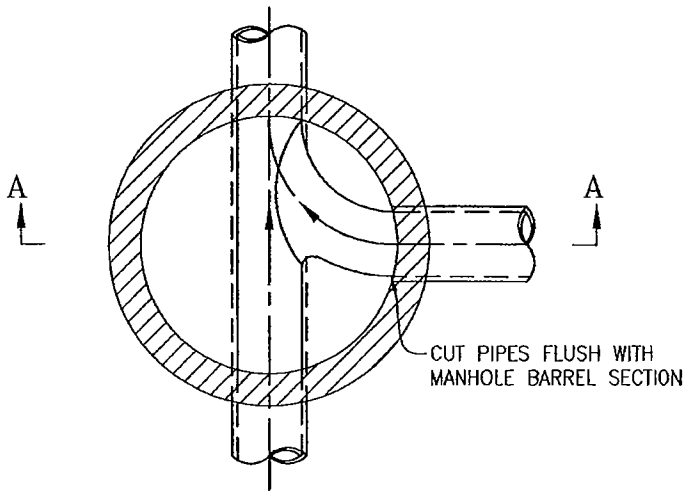

PLAN

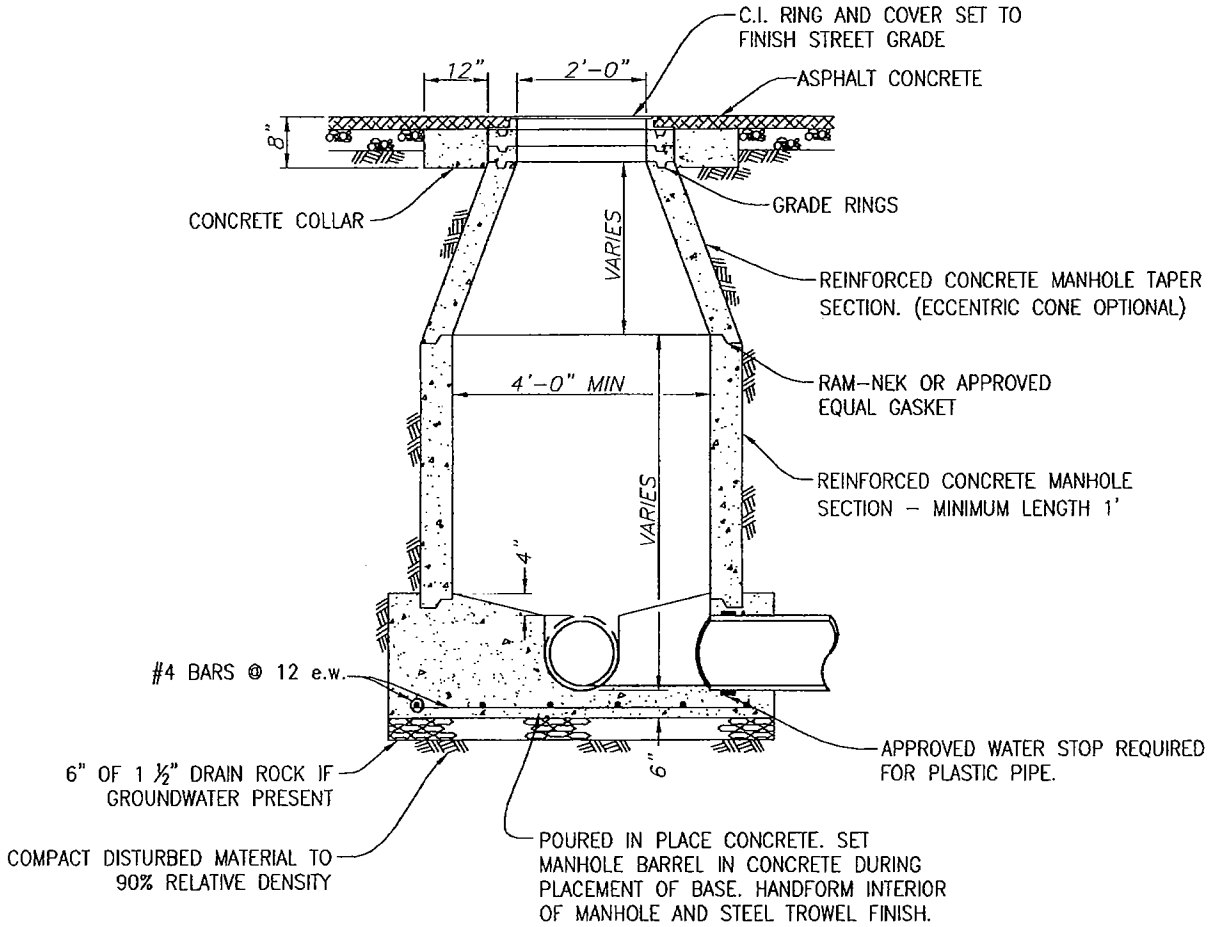

SECTION "A-A"

CITY OF PATTERSON IMPROVEMENT STANDARDS

SANITARY SEWER MANHOLE

APPROVED BY: Michael [illegible] DATE: 5/12/11

DRAWING NO. 7 - A

Feb 28, 2011 - 11:26am
P:\COP\Improvement Standards\Drawings\7 - A.dwg

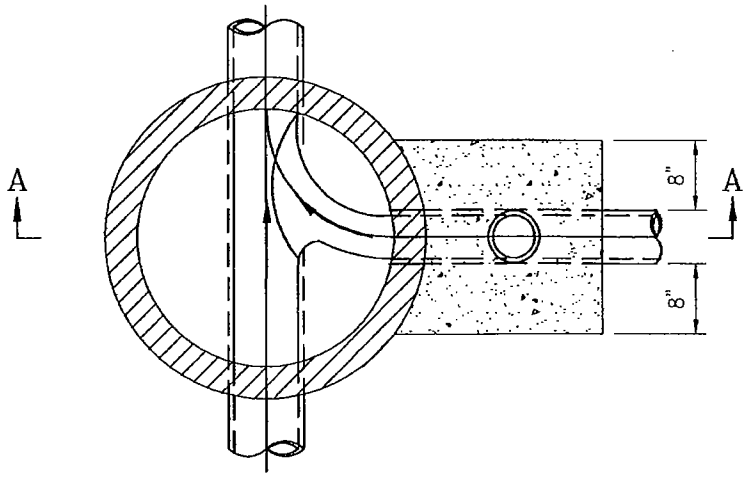

PLAN

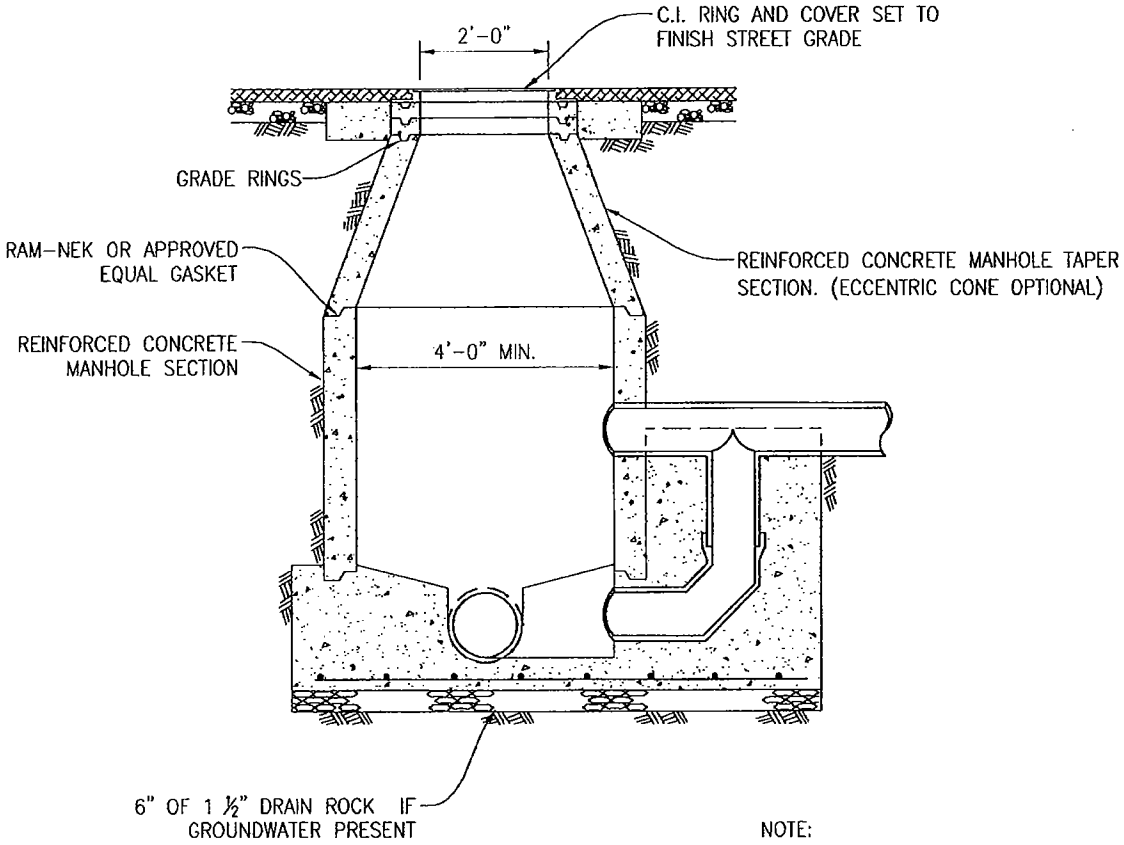

NOTE:
SEE STANDARD DRAWING 7-A FOR ADDITIONAL INFORMATION

SECTION "A-A"

CITY OF PATTERSON IMPROVEMENT STANDARDS

SANITARY SEWER DROP MANHOLE

APPROVED BY: Michael Willey DATE: 5|12|11

DRAWING NO. 7 - B

Feb 28, 2011 - 11:26am
P:\COP\Improvement Standards\Drawings\7 - B.dwg

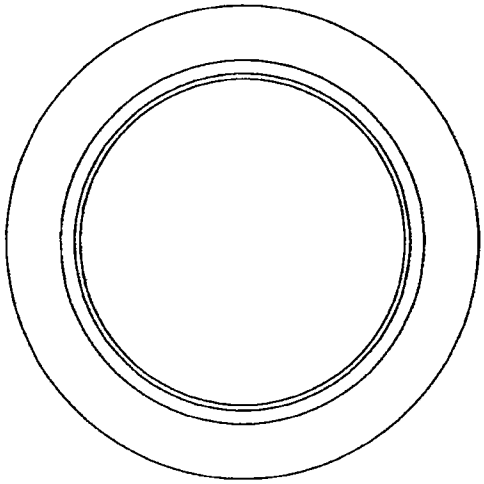

PLAN

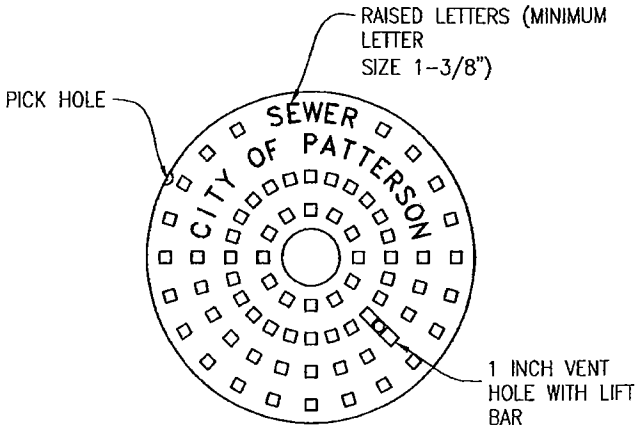

TOP

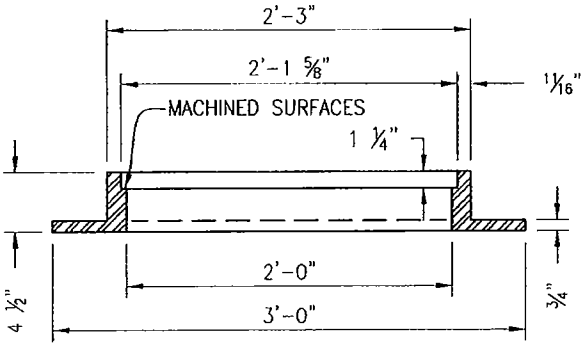

MANHOLE FRAME DETAIL

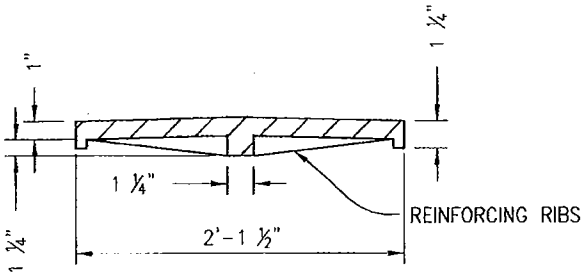

SECTION

MINIMUM WEIGHT OF FRAME AND COVER: 280 lbs.

MANHOLE COVER DETAIL

CITY OF PATTERSON IMPROVEMENT STANDARDS

CAST IRON MANHOLE FRAME AND COVER

APPROVED: Michael Willett DATE: 5/12/11

DRAWING NO. 7 - C

Feb 28, 2011 - 11:27am
P:\COP\Improvement Standards\Drawings\7 - C.dwg

CASTING FRAME AND COVER

6" PINKERTON FOUNDRY
NO. A-490 OR EQUAL.

8" PINKERTON FOUNDRY
NO. A-211 OR EQUAL.

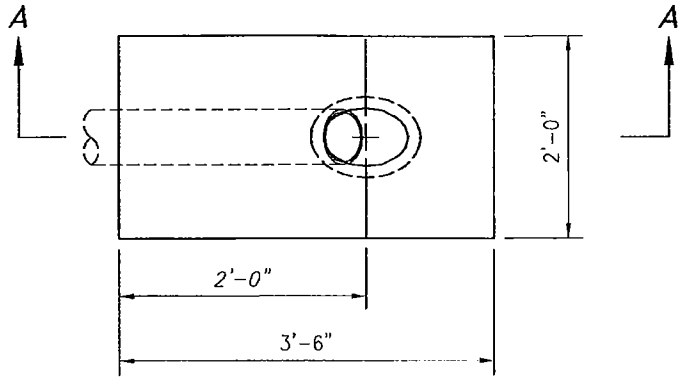

PLAN

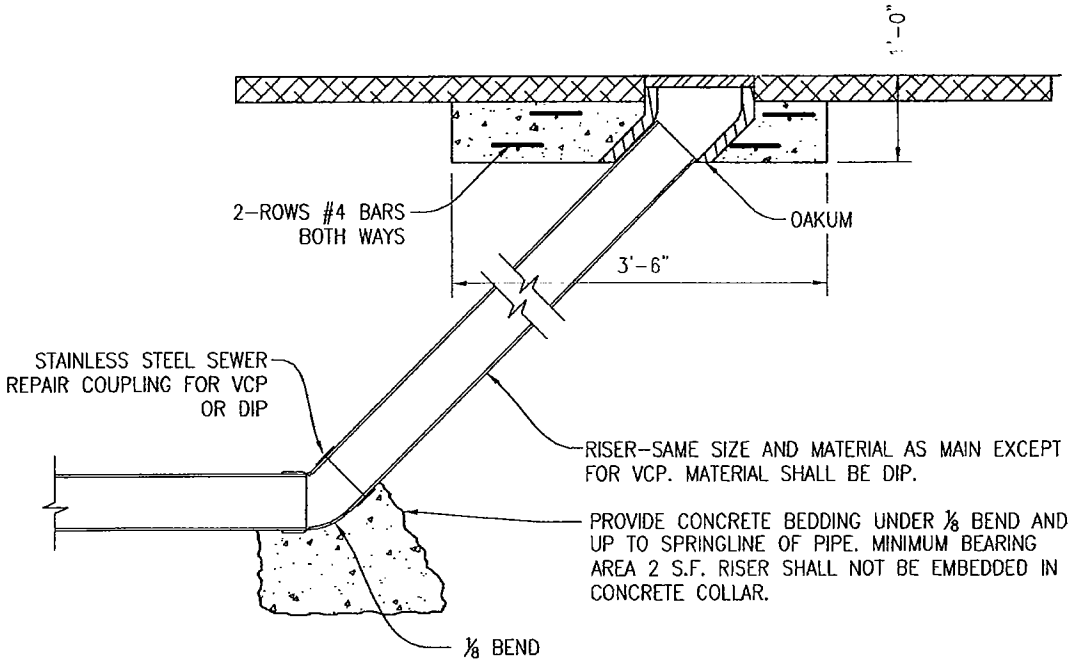

SECTION A-A

CITY OF PATTERSON IMPROVEMENT STANDARDS

TEMPORARY SANITARY SEWER CLEANOUT

APPROVED BY: Michael Willett DATE: 5/12/11

DRAWING NO. 7 - D

Feb 28, 2011 - 11:27am
P:\COP\Improvement Standards\Drawings\7 - D.dwg

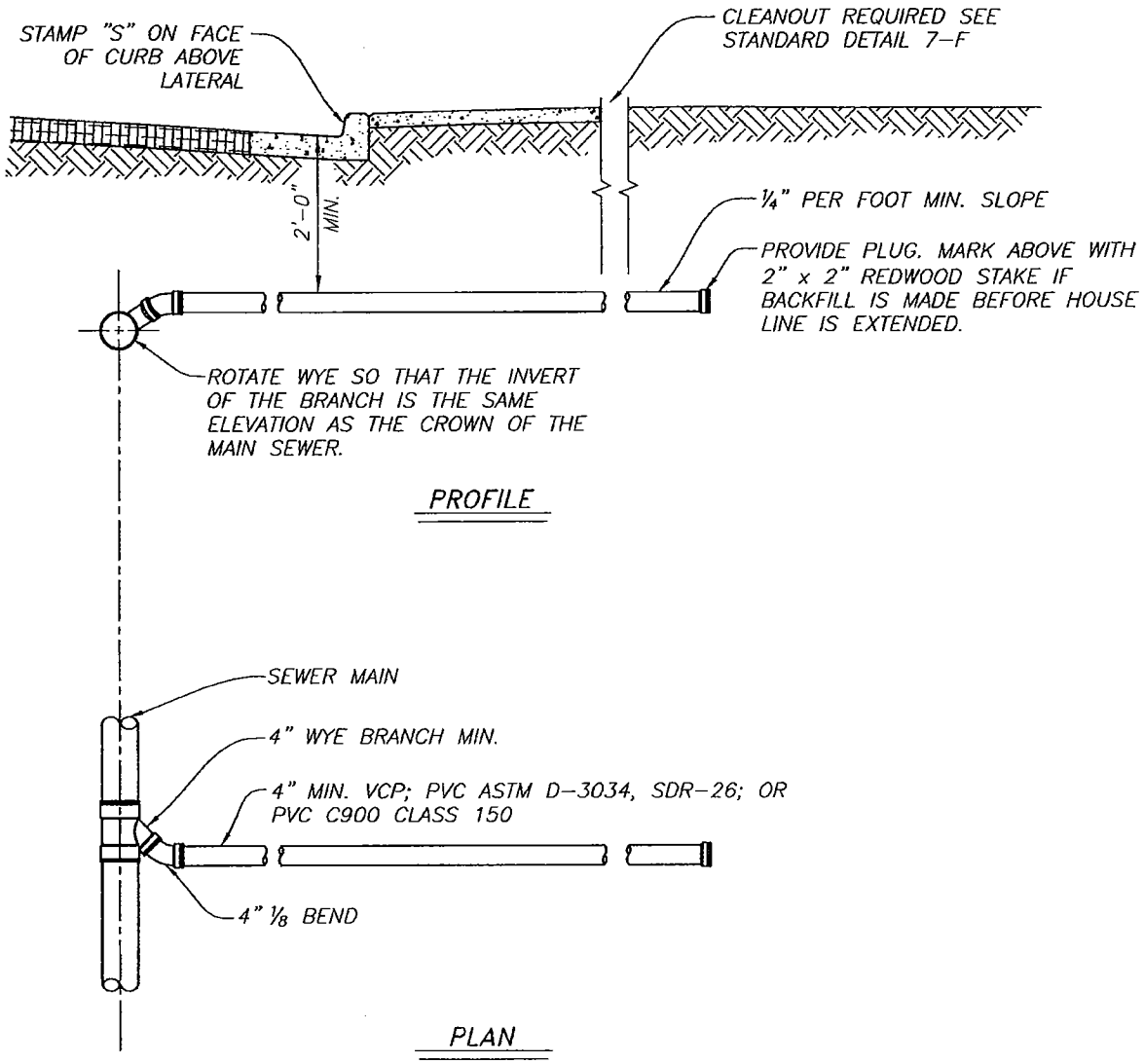

NOTES:

1. LATERALS SHALL HAVE SAME BEDDING & BACKFILL AS SEWER MAIN. TRENCH WIDTH FOR 4-INCH OR SMALLER LINES SHALL BE SUFFICIENT TO ALLOW MECHANICAL COMPACTION OF BACKFILL AROUND CONDUIT.

2. SEWER SERVICE SHALL HAVE A MINIMUM OF 2 FEET COVER AT PROPERTY LINE WHENEVER LATERAL DEPTH AND SERVICE SLOPE OF ¼ INCH PER FOOT (MIN.) PERMIT. SERVICE SHALL BE DEEP ENOUGH TO SERVE ADJACENT PROPERTY.

3. WHEN THE LATERAL SEWER DEPTH IS SUCH THAT 2 FEET COVER AT PROPERTY LINE CANNOT BE MET, THE LATERAL MUST BE ENCASED IN CONCRETE IN THE TRAVELED RIGHT OF WAY OR PVC PIPE MEETING THE REQUIREMENTS OF AWWA C900 CLASS 150 SHALL BE USED.

CITY OF PATTERSON IMPROVEMENT STANDARDS

4-INCH SEWER SERVICE

APPROVED Michael Willett DATE: 5/12/11

DRAWING NO. 7 - E

Feb 28, 2011 - 11:27am
P:\COP\Improvement Standards\Drawings\7 - E.dwg

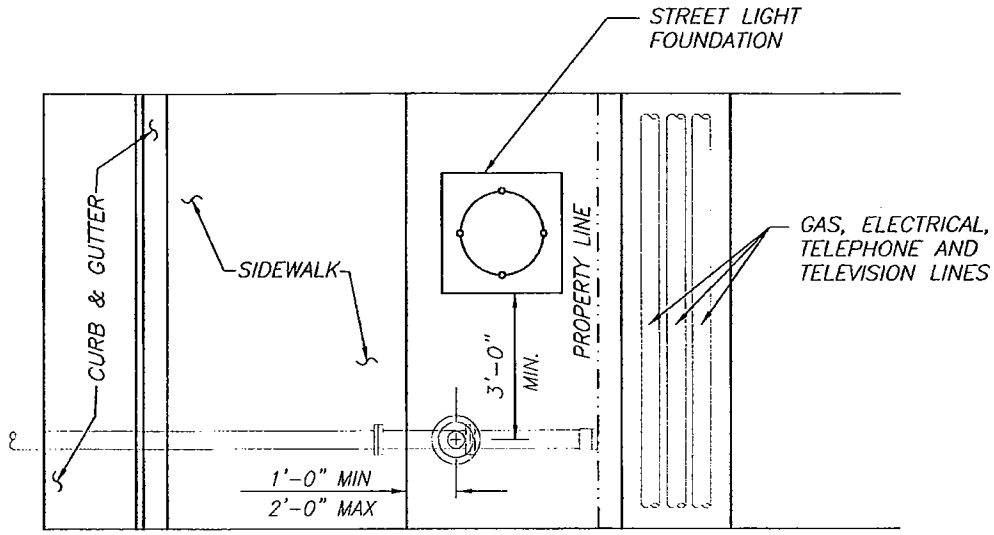

PLAN

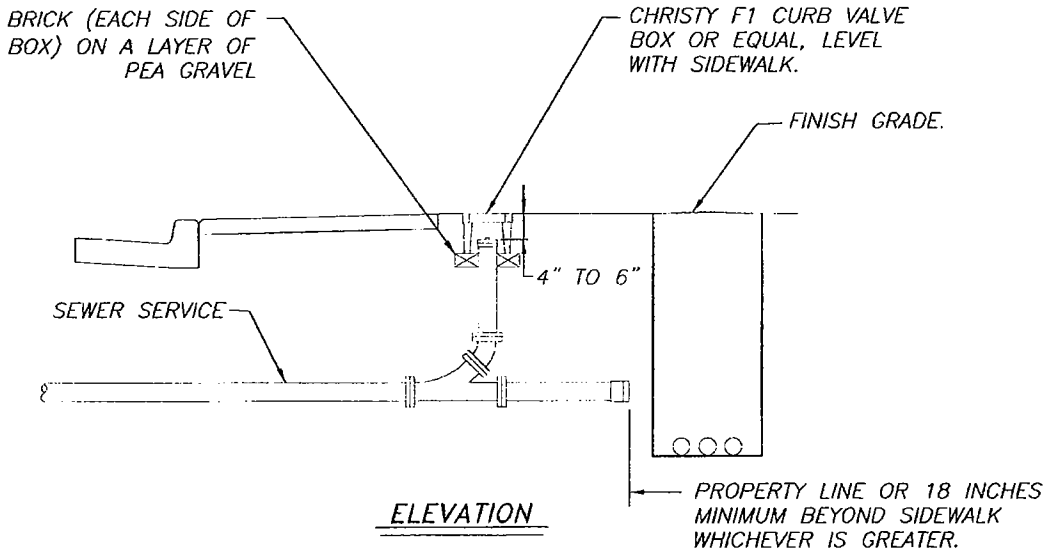

ELEVATION

NOTES:

1. THE RISER SHALL BE TERMINATED APPROXIMATELY 6 INCHES BELOW GRADE WITH A SOLVENT WELD CAP. THE CLEANOUT CAP, PLUG AND CURB VALVE BOX SHALL BE INSTALLED WHEN CONNECTION TO THE SEWER SERVICE IS MADE.
2. CLEANOUT LOCATION IS SHOWN BASED ON ATTACHED CURB AND SIDEWALK. FOR SEPARATED CURB AND SIDEWALK, INSTALL CLEANOUT 2 FEET BEHIND CURB.

CITY OF PATTERSON IMPROVEMENT STANDARDS

4-INCH SERVICE CLEANOUT

APPROVED BY: Michael Willett DATE: 5/12/11

DRAWING NO. 7 - F

Feb 28, 2011 - 11:28am
P:\COP\Improvement Standards\Drawings\7 - F.dwg

NOTE
TRENCHES NOT IN PAVED AREAS SHALL BE RESTORED TO MATCH EXISTING SURFACE CONDITIONS.

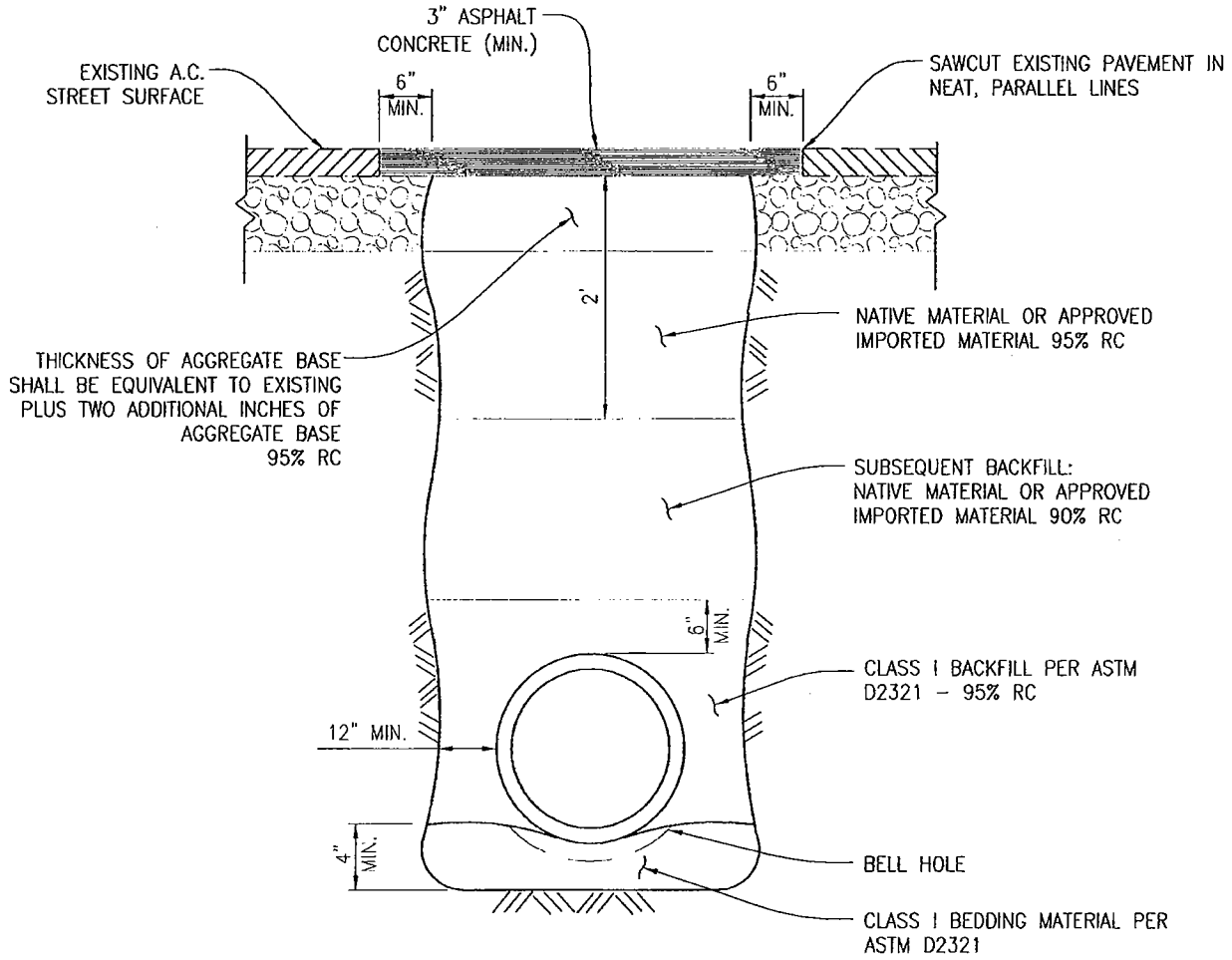

NOTES:

1. IF THE BOTTOM OF TRENCH IS SOFT OR UNSTABLE, IT SHALL BE OVER-EXCAVATED 1 FOOT BELOW GRADE AND BACKFILLED WITH APPROVED IMPORTED MATERIAL.

CITY OF PATTERSON IMPROVEMENT STANDARDS

FLEXIBLE WALL PIPE BACKFILL

APPROVED BY: Michael Willett DATE: 5/12/11

DRAWING NO. 7 - G

Feb 28, 2011 - 11:28am
P:\COP\Improvement Standards\Drawings\7 - G.dwg

NOTE
TRENCHES NOT IN PAVED AREAS SHALL BE RESTORED TO MATCH EXISTING SURFACE CONDITIONS.

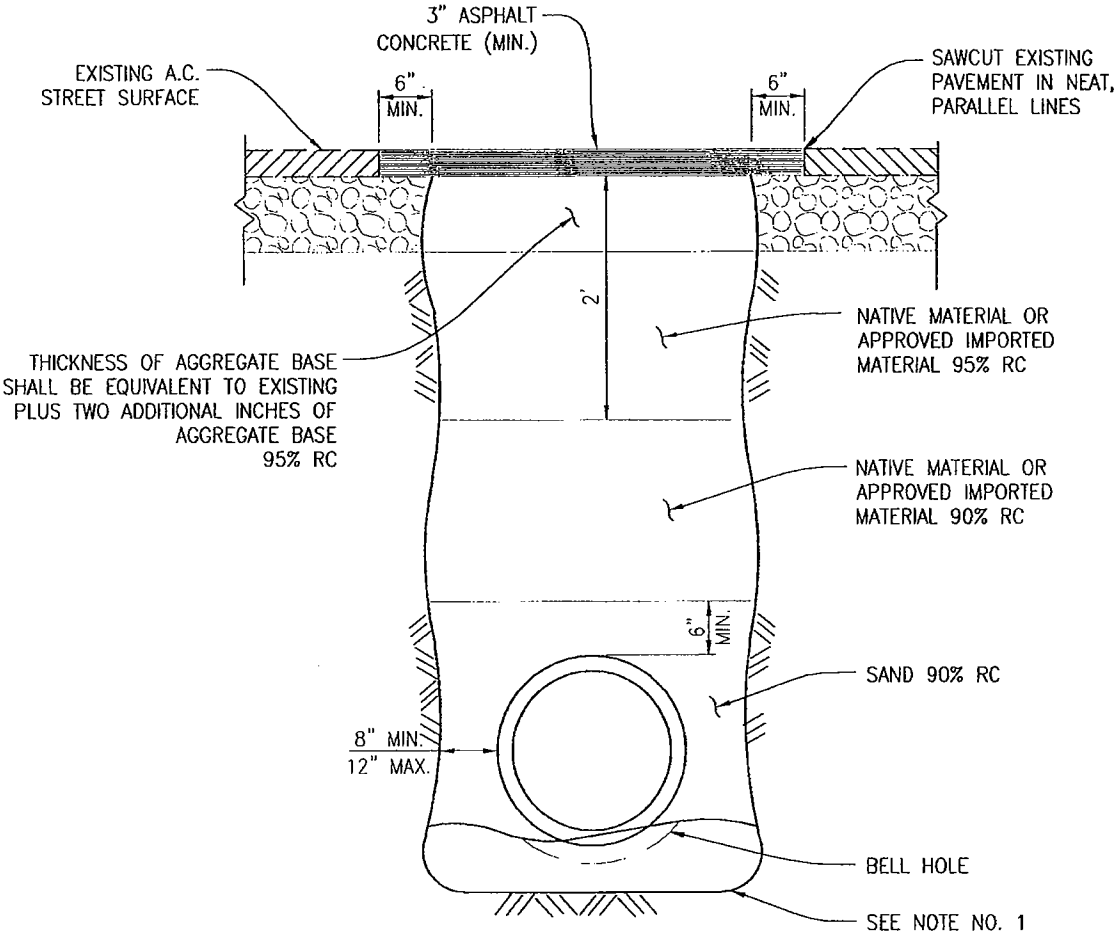

NOTES:

1. IF THE BOTTOM OF TRENCH IS SOFT OR UNSTABLE, IT SHALL BE OVER-EXCAVATED A MINIMUM OF 1 FOOT BELOW GRADE AND BACKFILLED WITH APPROVED IMPORTED MATERIAL.

2. SAND SHALL CONFORM TO THE FOLLOWING GRADING REQUIREMENTS:

SIEVE SIZE	PERCENTAGE PASSING
#4	100
#16	0-70
#30	0-15
#200	0-5

CITY OF PATTERSON IMPROVEMENT STANDARDS

RIGID WALL PIPE BACKFILL

APPROVED: Michael Wilson DATE: 5/12/11

DRAWING NO. 7 - H

Feb 28, 2011 - 11:28am
P:\COP\Improvement Standards\Drawings\7 - H.dwg

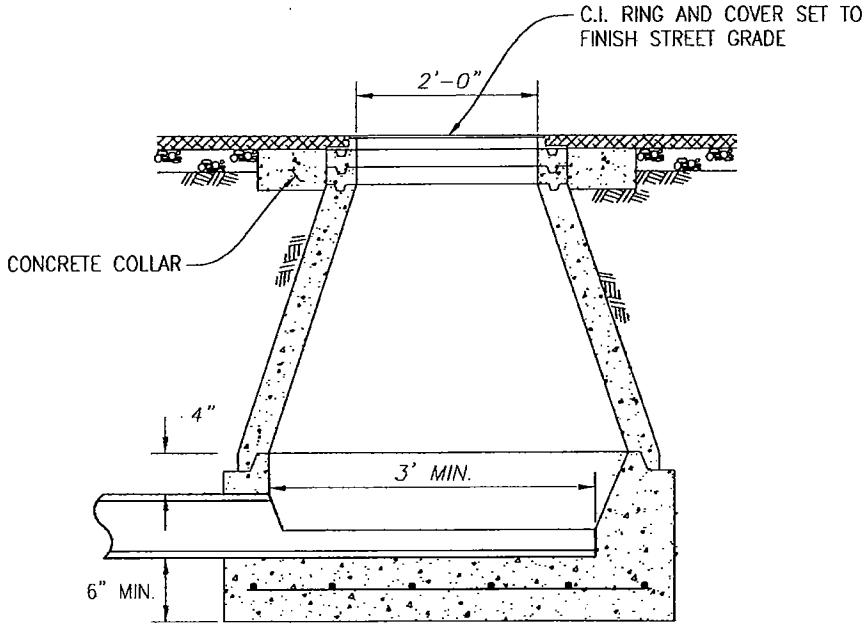

MANHOLE SECTION

NOTE:

SEE DRAWING NO. 7-A FOR ADDITIONAL INFORMATION.

Feb 28, 2011 - 11:28am
P:\COP\Improvement Standards\Drawings\7 - 1.dwg

CITY OF PATTERSON IMPROVEMENT STANDARDS

TERMINAL MANHOLE

APPROVED: Michael Willett DATE: 5/12/11

DRAWING NO. 7-1

SECTION 8 – STORM DRAINAGE

SPECIFICATIONS:

8.1 GENERAL 8-1
8.2 SUBMITTALS 8-1
8.3 FLOW RATES 8-2
8.4 PIPE DESIGN 8-2
8.5 DRAIN INLETS 8-4
8.6 MANHOLES 8-4
8.7 TRENCH EXCAVATION 8-4
8.8 WATER IN TRENCH 8-5
8.9 LAYING AND JOINTING OF PIPE 8-5
8.10 BACKFILL 8-6
8.11 DEFLECTION TESTING 8-6
8.12 CLOSED CIRCUIT TV INSPECTION 8-7
8.13 DETENTION BASINS 8-7
8.14 SUPERVISORY CONTROL AND DATA ACQUISITION 8-8
8.15 PUMP STATION 8-9
8.16 TRASHRACKS 8-10
8.17 ACCESS 8-11

DRAWINGS:

8A STORM DESIGN SHEET
8B RAIN INTENSITY FREQUENCY CURVES
8C FLEXIBLE WALL PIPE BACKFILL
8D RIGID WALL PIPE BACKFILL
8E C.I.P.P. STORM DRAIN AND TRENCH
8F STORM DRAIN MANHOLE FOR 30" – 48" C.I.P.P.
8G STORM DRAIN MANHOLE FOR 54" – 96' C.I.P.P.
8H STORM DRAIN MANHOLE PLAN VIEW (C.I.P.P.)
8I STORM DRAIN MANHOLE
8J CAST IRON MANHOLE FRAME AND COVER
8K DRAIN INLETS

SECTION 8

STORM DRAINAGE

8.1 GENERAL

All drainage design shall be in accordance with the following requirements and shall provide a positive means of drainage to the discharge point designated by the City. The use of retention basins or storage basins will be permitted only with specific prior approval by the City. All drainage calculations shall be submitted to the City Engineer for review. Drainage calculations shall cover all drainage facilities required to deliver run-off to a certain location and hydraulic grade line elevation as approved by the City Engineer. Drainage flow calculations shall be submitted on Drawing No. 8-A. Output of computerized calculations will not be accepted unless all of the data required on Drawing No. 8-A is provided in the same format as Drawing No. 8-A.

Retention or storage basins are required when downstream facilities are incapable of accepting the higher storm drainage runoff associated with direct discharge. Even with reduced discharges associated with basins, there are times when basin discharges must be reduced or halted due to downstream capacity constraints. Whenever basins are installed with discharge facilities, automated controls for the outlet facilities including SCADA operation are required.

8.2 SUBMITTALS

Prior to submittal of Improvement Plans for the first phase of construction, a storm drainage master plan for the entire development shall be submitted to the City Engineer for review and approval. The plan shall include the following:

- A plan with a scale of 1" to 100' showing the proposed system, preliminary pipe sizes, tributary sub-areas and existing and future tributary areas outside the project area.

- Hydraulic calculations.

- Detention basin design calculations and conceptual drawings of the basin and access road. The drawings shall include approximate groundwater elevation, basin inverts, maximum water surface elevations and hydraulic grade line control elevations.

- A description and preliminary sketch of any pump stations or gravity outlet facilities. This information shall include number and size of pumps, sump volumes and pump operating levels.

8.3 FLOW RATES

Flow rates shall be determined by using the Rational Formula, Q=CIA. Where Q represents the quantity of run-off in cubic feet per second; A, the total run-off area in acres; I, the intensity of the rainfall in inches per hour as determined from the intensity duration curves shown on Drawing No. 8-B; and C, the coefficient of run-off also shown on Drawing No. 8-B.

Roof to gutter time shall be assumed to be 20 minutes.

8.4 PIPE DESIGN

1. GENERAL

Storm drainage piping shall be designed to handle a storm with a minimum return period of five years. The minimum size of any storm drainage pipe shall be 15 inches in diameter except for pipes terminated in cul-de-sacs and catch basin laterals which shall be a minimum of 12 inches in diameter.

Manning's formula shall be used to calculate design flow, velocity, slope and pipe diameter. Manning's roughness coefficient "**n**" varies with the type of pipe used according to the following table:

Pipe Material	n
Plastic	0.012
Reinforced Concrete	0.013
Cast-In-Place Concrete	0.015

Plastic pipe up to and including 15-inch diameter shall conform to ASTM Designation D3034. Pipe dimension ratio shall be SDR35. Plastic pipe 18-inch to 27-inch in diameter shall conform to ASTM Designation F679. Rubber gasket joints shall be factory installed and conform to ASTM F477.

Reinforced concrete pipe shall be the minimum class required to serve the purpose intended but in no case shall be less than Class III conforming to the specifications for Reinforced Concrete Culvert, Storm Drain and Sewer Pipe, ASTM Designation C76. The pipe shall be manufactured using the packer head method or shall be centrifugally spun. The pipe shall utilize a Bureau of Reclamation Type R-4 bell and spigot. Use of elliptical reinforcement is not allowed.

Cast-in-place concrete pipe shall only be used if approved by the City Engineer. Cast-in-place concrete pipe shall conform to Section 63 of the State Standards and these Improvement Standards.

2. SLOPE

Minimum slopes are as follows:

Diameter (inches)	Minimum Slope (ft/ft)
12	0.0019
15	0.0014
18	0.0011
21	0.0009
24	0.0008
30	0.0006
36	0.0006
42	0.0005
48	0.0004

The above slopes are intended to provide velocities of not less than 2.0 feet per second when flowing half full regardless of the slope of the hydraulic grade line. (Where the City's system is surcharged, velocities based on the design hydraulic grade line are well below 2 feet per second except in trunk lines.)

If it is impractical to meet these velocity standards, the minimum slopes can be waived by the City Engineer.

The slope of storm drains between manholes shall be constant.

Catch basin laterals shall have a minimum fall of 0.10 feet between the catch basin and the manhole. Desired fall is 0.30 feet or more.

Siphons are not permitted.

3. VERTICAL ALIGNMENT

The minimum cover for storm drains shall be 2 feet 6-inches. When crossing a water main, the storm drain line should be installed below the water main with a minimum clearance of 12-inches. At points of convergence of pipes, the invert of the inflowing pipe shall be a minimum of 0.1 foot higher than the invert of the outflowing pipe. (This 0.1 foot of elevation difference does not apply for laying of pipe through a manhole.)

4. HORIZONTAL ALIGNMENT

Drainage pipes shall be placed within street rights-of-way unless placement in an easement is specifically approved by the City Engineer. Alignment shall be parallel to the street centerline whenever possible.

Permanent easements shall be provided for all mains not located in public rights-of-way. The minimum easement width shall be 15 feet. Wider easements may be required by the Director for any lines over 18-inches in diameter or with an invert elevation 5 feet or greater below ground line. The line shall be located in the center of the easement unless otherwise required by the Director.

A minimum horizontal clearance of 10 feet shall be maintained between drain lines and water mains, unless otherwise approved by the City Engineer. If the 10-foot separation is waived, the requirements of the California State Department of Health Services for separation between water mains and sanitary sewers shall be adhered to.

8.5 DRAIN INLETS

Drain inlets shall be as shown on Standard Drawing 8-K. The structural channel iron shall be galvanized to conform to the requirements Section 75-1.05 of the State Standards.

Spacing of drain inlets shall be such that the surface flow to the drain inlet does not encroach into vehicular travel ways.

8.6 MANHOLES

Manholes shall be located on storm trunk and lateral pipelines. Manholes shall be placed at all storm drain intersections, at sections where changes in slope, pipe size and alignment occur, and at the upstream ends of all storm drains.

Manholes shall have a maximum spacing of 500 feet.

Invert elevation drop across each manhole shall equal the difference in pipe diameter where there is a change in pipe size and a minimum of 0.1 foot at all bends.

8.7 TRENCH EXCAVATION

The Contractor shall, prior to beginning construction, obtain from the Division of Industrial Safety the permit required by California Labor Code, Section 6500, and pay any fee charged for such permit. In addition thereto, whenever the work under the Contract involves trench excavation 5 feet or more in depth, the Contractor shall

submit for approval to a registered civil or structural engineer representing the City, in advance of excavation, a detailed plan showing the design of shoring, bracing, sloping, or other provisions to be made for worker protection from the hazard of caving ground during the excavation. If such plan varies from the shoring system standards established by the Construction Safety Orders of the Division of Industrial Safety, the plan shall be prepared by a registered civil or structural engineer. Nothing in this section shall be deemed to allow the use of shoring, sloping or other protective system less effective than that required by the Construction Safety Orders. Nothing in this section shall be construed to impose tort liability on the City, City Engineer, or any of their officers, agents or employees.

The pipe trench shall be dug with side walls sloped or otherwise supported in a safe manner in accordance with the Department of Industrial Relations, Division of Occupational Safety and Health Administration regulations pertaining to trenching.

Excavated material shall be placed on only one side of the trench unless otherwise directed. Separation distance between piles of excavated material and trench shall be consistent with the Construction Safety Orders.

The alignment and grade for the bottom of the trench shall be properly established before the trench is excavated and shall be approved by the City before the pipe is laid. Trenches shall be true to line and grade, and the bottom shall be even and free from all objectionable material.

8.8 WATER IN TRENCH

When water is encountered in the trench, it shall be removed by draining or by pumping. Should water get into the trench before the pipe is laid, the laying of pipe shall be postponed until the trench has dried sufficiently to provide a firm foundation for the pipe or else, the mud or softer material shall be removed and grade re-established by backfilling and compacting with suitable material as determined by the City.

8.9 LAYING AND JOINTING OF PIPE

Laying and jointing of pipe shall be in accordance with the manufacturer's recommendations and as approved by the City. Joint deflections shall not exceed 80% of the maximum recommendations of the manufacturer.

Where rubber gaskets are used for jointing pipe, a feeler gauge shall be used to check the position of the rubber gasket upon each closure. The interior of the pipe shall be cleared of all debris, and exposed pipe ends shall be closed by a suitable pipe plug when pipe laying is not in progress.

The pipe shall be laid on a trench bottom shaped to provide adequate support of the pipe except at coupling or bell holes. The use of prepared mounds to facilitate laying of the pipe is not approved.

Where pipe is to be encased or have concrete bedding, suitable concrete blocks shall be used to support the pipe in the proper location while placing concrete.

8.10 BACKFILL

After the storm drains have been properly constructed and inspected, the trench shall be backfilled and compacted as shown on Drawing No. 8-C for flexible walled pipe, Drawing No. 8-D for rigid walled pipe and Drawing No. 8-E for cast-in-place pipe.

Compaction tests shall be performed by a testing laboratory approved by the City. The laboratory shall be retained by the Developer and all testing expenses shall be paid by the Developer.

Jetting of backfill will not be allowed except in special cases as approved by the City Engineer.

During the compaction operation, the contractor must exercise extreme caution so as not to damage or disturb the pipe.

8.11 DEFLECTION TESTING

PVC storm drain pipe shall be tested using a mandrel or other approved testing device. Maximum deflection shall not exceed 5% of the average inside diameter of the pipe.

For all pipes less than 24-inch (I.D.), a mandrel shall be pulled through the pipe by hand. Prior to use, the mandrel shall be approved by the Director. If the mandrel fails to pass, the pipe will be deemed to be over-deflected.

Mandrels shall be rigid, nonadjustable, odd-numbering-leg (9 legs minimum), having an effective length not less than its nominal diameter. The minimum diameter of the mandrel at any point along its full length shall be as follows:

Pipe Material	Nominal Size (Inches)	Minimum Mandrel Diameter (Inches)
PVC-ASTM D3034	12	10.793
(SDR35)	15	13.203
PVC-ASTM F679	18	16.748
(T-1 Wall)	21	19.744
	24	22.212
	27	25.033

Mandrels shall be fabricated from steel, fitted with pulling rings at each end, and stamped or engraved on some segment, other than the runner, with the pipe material, specifications, nominal size and mandrel O.D.

For pipes with a nominal diameter of 24-inches or larger, deflections shall be determined by a method submitted to and approved by the Director. If a mandrel is selected, the minimum diameter, length and other requirements shall conform to the dimensions and requirements previously stated.

8.12 CLOSED CIRCUIT TV INSPECTION

Prior to placing the final street surfacing, the Contractor will inspect all new storm drain piping with a closed circuit television system. This will be done after the pipe has been installed true to the prescribed lines and grades, the trench backfilled and compacted, the manhole and cleanout covers set to proper grade, the roadway subgrade compacted, aggregate subbases and bases placed and compacted, and the sewer system cleaned of all debris.

At the start of each storm drain section, the Contractor shall record the manhole location by street intersections the inspection is beginning and ending at. This information shall appear in typewritten letters on the videotape. A gauge shall be attached to and dragged behind the camera to indicate the depth of any standing water within the line. The gauge shall have a diameter of 10% of the pipe diameter being televised.

Pulling of the camera shall be stopped and locations recorded in typewritten letters on the videotape at the following locations:

- The beginning and ending locations of all areas where the depth of standing water exceeds 10% of the pipe diameter.
- Any problem areas.

Camera pulling speed shall not exceed 100 ft. per minute.

Videotapes shall be delivered to the Director for his review. The Contractor shall make all necessary repairs and corrections to the pipeline as required by the Director prior to paving.

8.13 DETENTION BASINS

Detention basins shall be designed with a capacity to hold the total run-off from a 10-year frequency, 24-hour event if gravity discharge is used. For pump discharge, the capacity shall be large enough to hold the total run-off from a 50-year frequency, 24-hour event.

The maximum design water surface of the basin shall be 1-foot below the elevation of the top of the curb at the lowest catch basin inlet within the tributary area.

Hydraulic grade line control elevation, if not established, shall be the elevation at which 50 percent of the design containment occurs.

Basin bottoms shall be provided with a minimum slope of 0.008 toward approved drainage facilities. Maximum sideslopes of detention basins shall be 6 horiz:1 vert. unless otherwise approved by the City.

Basin inlet/outlet piping shall enter the basin through a reinforced concrete inlet/outlet structure installed in the sideslope of the basin.

Storm drainage piping shall be designed such that nuisance water flows less than the discharge capacity of the basin shall be evacuated without first entering the basin. Detention basins shall be provided with outlet facilities capable of draining a full basin within 48 hours.

8.14 SUPERVISORY CONTROL AND DATA ACQUISITION (SCADA)

1. GENERAL

The City of Patterson presently has a SCADA system for monitoring and remote operation of gates and pump stations associated with discharge of water from storm drainage basins. A RTU shall be provided at each outlet facility and shall be linked to the City SCADA system for remote monitoring and operation. To provide a complete operation system, the services of a system integrator specified by the City is required and design drawings for the system shall be prepared by an electrical engineer licensed in the State of California.

As a minimum, the SCADA system shall be capable of monitoring the water levels in the basin(s) and discharge facilities; opening or closing of discharge gates automatically or manually; monitoring of gate positions; and manual or automatic operation of pumps.

Electrical design drawings shall include:

- Electrical Site Plan
- Power Distribution and Control Diagram
- PLC I/O Wiring Diagram
- Miscellaneous Details

2. MATERIALS

Due to the custom nature of the SCADA system design, shop drawings and product data submittals are required on the system components. (See Section 1.7)

Controls shall be mounted in a deadfront free standing self contained NEMA 3R metal enclosure with a padlockable door. The control center and all electrical components shall bear the Underwriters Laboratory (UL) label.

8.15 PUMP STATION

3. GENERAL

Pumping stations shall be designed to efficiently handle the calculated run-off from a storm with a ten-year return period unless utilized in conjunction with a detention basin. Pumps designed in conjunction with basins shall be capable of draining 100 percent of the basin's storage capacity within 48 hours.

Pump stations shall be designed with a separator to remove settling and floating debris from the water entering the pump sump. They will also be designed with the following criteria:

- Pump stations shall be duplex style stations with non-clog submersible FLYGT sewer pumps and slide rail systems or non-clog low RPM vertical turbine or mixed flow pumps. (Slide rails shall be 2-inch schedule 40 steel pipe with stainless steel hardware.) Each pump shall be capable of pumping 100 percent of the design flow.

- Reinforced concrete pump sump of a hydraulic design that meets the recommendations of the pump manufacturer and the City.

- Minimum pump cycle time of 15 minutes.

2. CONTROLS

Controls shall be mounted in a deadfront free standing self-contained NEMA 3R metal enclosure with a padlockable door. The control center and all electrical components shall bear the Underwriters Laboratory (UL) label.

For each pump, there shall be included, a NEMA combination circuit breaker/overload protector with adjustable protection, short circuit protection, reset and disconnect for all phases; across the line magnetic

contactor; hand/off/automatic pump operation selector switch; overload relay to be pre-calibrated to match motor characteristics and factory sealed to ensure trip setting is tamper proof and 120 volt control circuitry.

The control center shall also have a pump alternator, pump run lights, condensation heater with thermostat and a 120 volt, 15 amp, GFI duplex receptacle mounted on the inner door.

A UL listed manual generator power transfer switch and a receptacle with closing plug, as specified by the Director, shall be provided to allow connection of an emergency power generator.

Monitoring and operation of the pump station shall be integrated into the City's existing SCADA system.

The water level sensor for pump control shall be as specified by the Director.

3. DISCHARGE PIPING

Discharge piping shall be ductile iron or steel. Plastic piping may be allowed below ground where approved by the City Engineer.

The design velocity in the discharge piping shall not exceed 8 foot per second. All internal piping in the pumping station shall be properly anchored and restrained. Expansion joints and flanged connections shall be provided to facilitate dismantling and maintenance of the equipment.

Valves, couplings and additional flanges as required for proper maintenance of the pumping facilities shall be readily accessible.

8.16 TRASHRACKS

Trashracks shall be installed on all basin inlet/outlet structures and pump stations utilizing vertical turbine or mixed flow pumps.

Trashracks shall be constructed of flat steel bars a minimum of 2 inches deep and 0.25 inches wide. Centerline to centerline spacing of bars shall be 2 inches maximum.

Bars shall be held in a parallel, equally spaced position by a flat toe plate welded across their lower ends and by horizontal spacing bars welded to the rack's downstream side. These horizontal bars shall not interface with raking the racks.

Trashracks shall be inclined 30 to 45 degrees from the horizontal and shall extend from the floor to the top of the structure. A walkway, platform or other suitable

level surface shall be provided at the top of all structures to allow for proper maintenance operations. Guardrails meeting the Industrial Safety Orders shall be provided. Sufficient clearance shall be provided between trashracks and surrounding fences or other obstacles to permit handling of cleaning rakes.

8.17 ACCESS

Pump Station layout shall allow for proper access of maintenance vehicles. Vehicular access route from the adjacent travelway throughout the site and back onto the public travelway shall be shown on the site plan. Access roads to pump stations shall be concrete or asphalt concrete paved as required by the Director. Minimum outer and inner turning radii for maintenance vehicles of 42 feet and 24 feet respectively, are required. Minimum access road pavement width shall be 12 feet.

STORM DRAINAGE CALCULATIONS
CITY OF PATTERSON

PAGE _____ OF _____

PROJECT: _____ DESIGNED BY: _____ DATE: _____

COMPANY NAME: _____ CHECKED BY: _____ DATE: _____

INLET OR M.H.		CONTRIB. Ac (A)	RUN OFF COEFF. (C)	CA	Σ CA	INTEN-SITY (I)	Q cfs (Σ CA x I)	PIPE DIA.	n	V (fps)	HGL SLOPE ft./ft.	PIPE LENGTH (ft.)	Δ ELEV. (ft.)	HGL ELEVATION		CROWN ELEVATION		T. MIN. IN PIPE	T. MIN. TOTAL	REMARKS
FROM	TO													UPSTREAM	DOWNSTREAM	UPSTREAM	DOWNSTREAM			

CITY OF PATTERSON IMPROVEMENT STANDARDS

STORM DESIGN SHEET

5/12/11 APPROVED BY: Michael Willett DATE

DRAWING NO. 8 - A

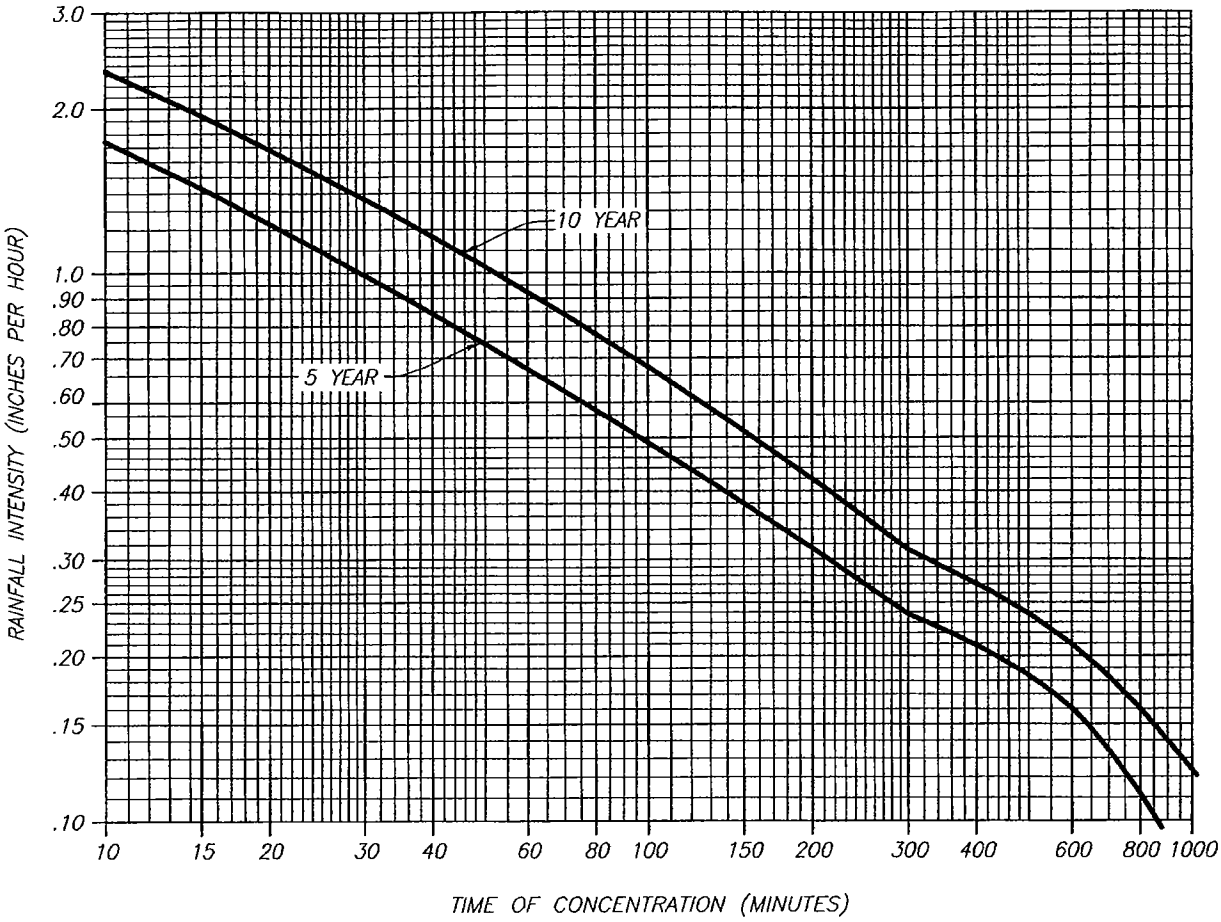

NOTES:

1. ALL STORM DRAINAGE PIPING SHALL BE DESIGNED TO HANDLE A STORM WITH A MINIMUM RETURN INTERVAL OF 5 YEARS.
2. ROOF TO GUTTER TIME SHALL BE ASSUMED TO BE 20 MINUTES.
3. THE 10 YEAR–24 HOUR RAINFALL IS 1.73 INCHES.
4. THE 50 YEAR–24 HOUR RAINFALL IS 2.24 INCHES.

RUNOFF COEFFICIENTS

ZONING	"C"
R1, R2	0.50
R3	0.60
COMMERCIAL	0.80
INDUSTRIAL	0.70

CITY OF PATTERSON IMPROVEMENT STANDARDS

CITY OF PATTERSON INCORPORATED 1919

RAIN INTENSITY FREQUENCY CURVES

APPROVED BY: Michael Willett DATE: 5/12/11

DRAWING NO. 8 - B

SERVER 1/h:/LIBRARY/DETAILS/CITY OF PATTERSON/02-23-07/1 - R.DWG

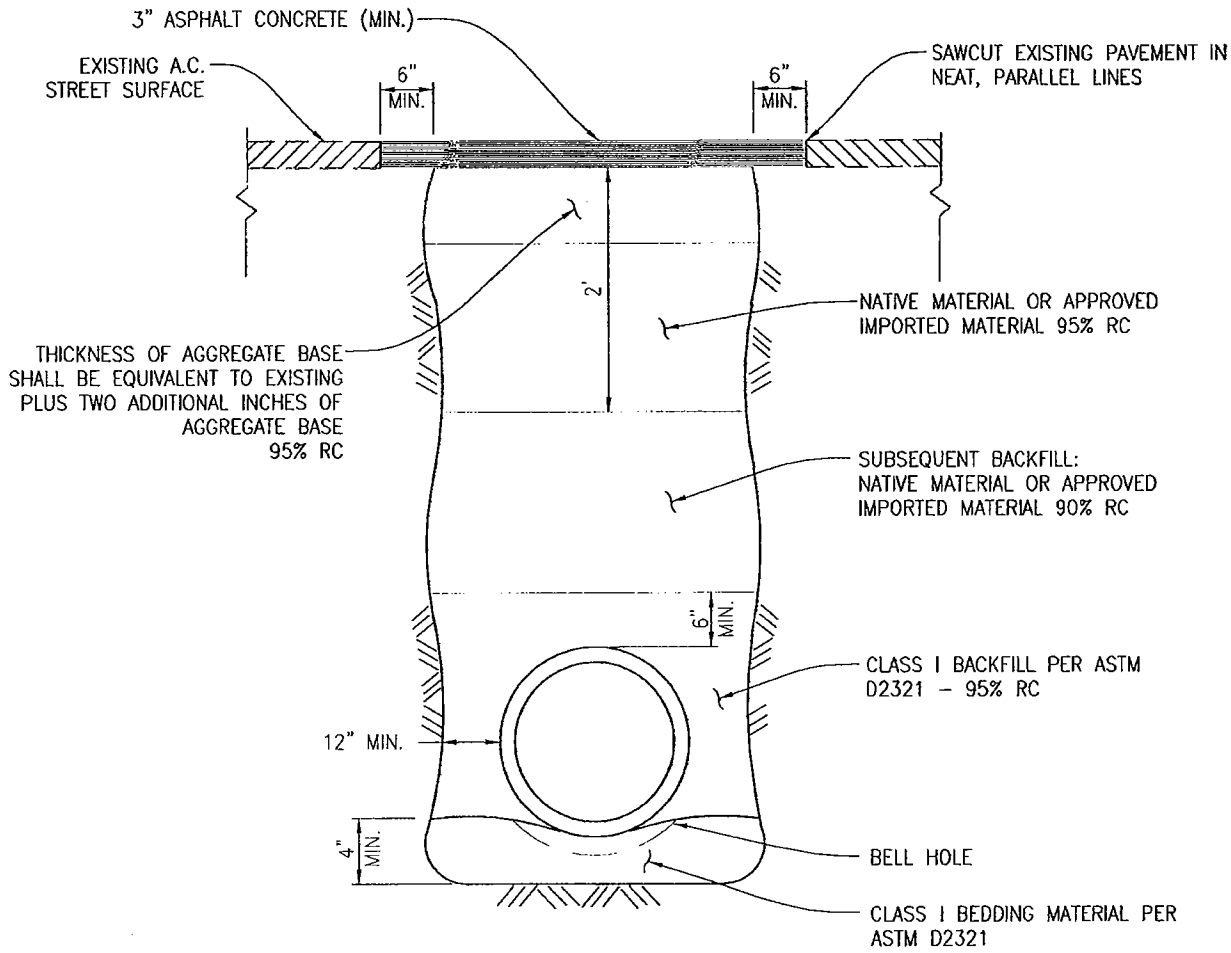

NOTES

1. IF THE BOTTOM OF TRENCH IS SOFT AND UNSTABLE, IT SHALL BE OVER EXCAVATED 1 FOOT BELOW GRADE AND BACKFILLED WITH APPROVED IMPORTED MATERIAL.

2. TRENCHES NOT IN PAVED AREAS SHALL BE RESTORED TO MATCH EXISTING SURFACE CONDITIONS.

CITY OF PATTERSON IMPROVEMENT STANDARDS

FLEXIBLE WALL PIPE BACKFILL

APPROVED: Michael Willey DATE: 5/12/11

DRAWING NO. 8 - C

Feb 28, 2011 - 11:36am
P:\COP\Improvement Standards\Drawings\8 - C.dwg

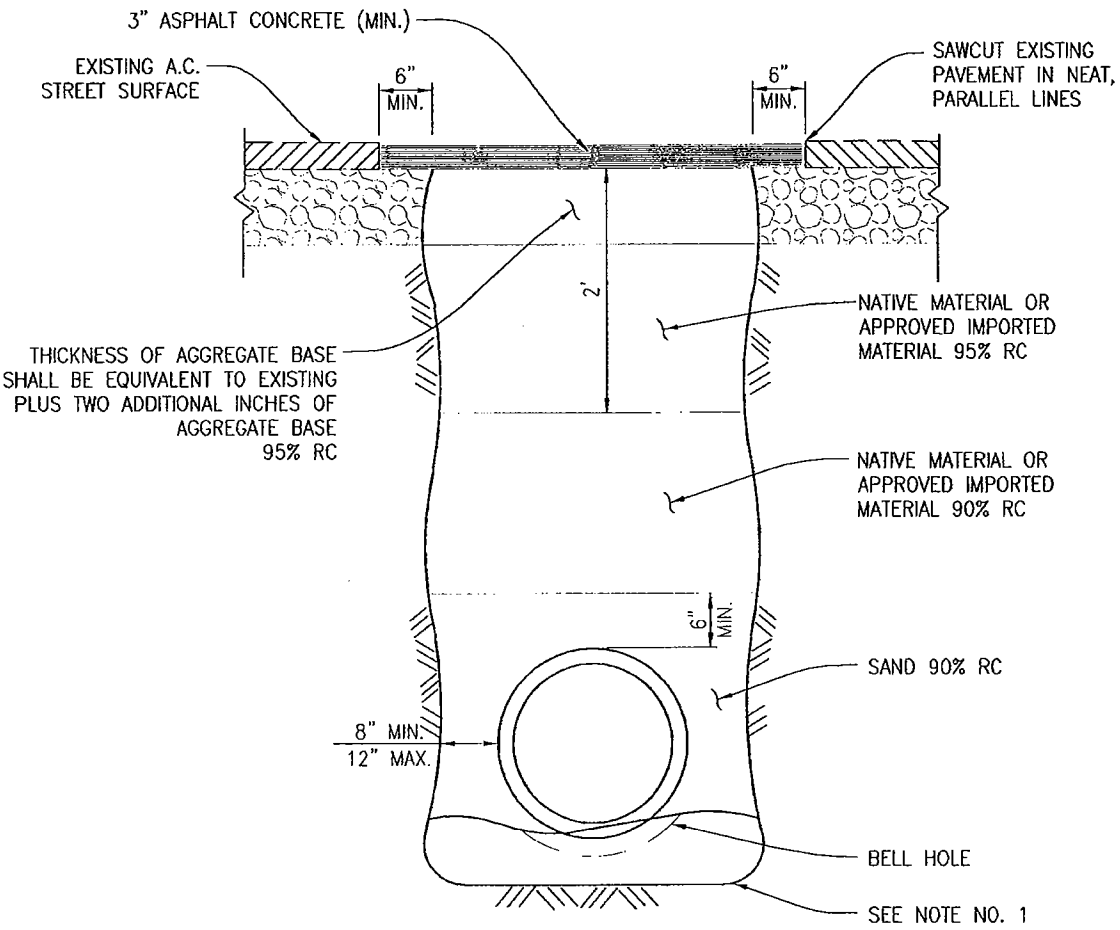

NOTES:

1. IF THE BOTTOM OF TRENCH IS SOFT OR UNSTABLE, IT SHALL BE OVER-EXCAVATED A MINIMUM OF 1 FOOT BELOW GRADE AND BACKFILLED WITH APPROVED IMPORTED MATERIAL.

2. SAND SHALL CONFORM TO THE FOLLOWING GRADING REQUIREMENTS:

SIEVE SIZE	PERCENTAGE PASSING
#4	100
#16	0-70
#30	0-15
#200	0-5

3. TRENCHES NOT IN PAVED AREAS SHALL BE RESTORED TO MATCH EXISTING SURFACE CONDITIONS.

CITY OF PATTERSON IMPROVEMENT STANDARDS

RIGID WALL PIPE BACKFILL

APPROVED: Michael Willett DATE: 5/12/11

DRAWING NO. 8 - D

Feb 28, 2011 - 11:36am
P:\COP\Improvement Standards\Drawings\8 - D.dwg

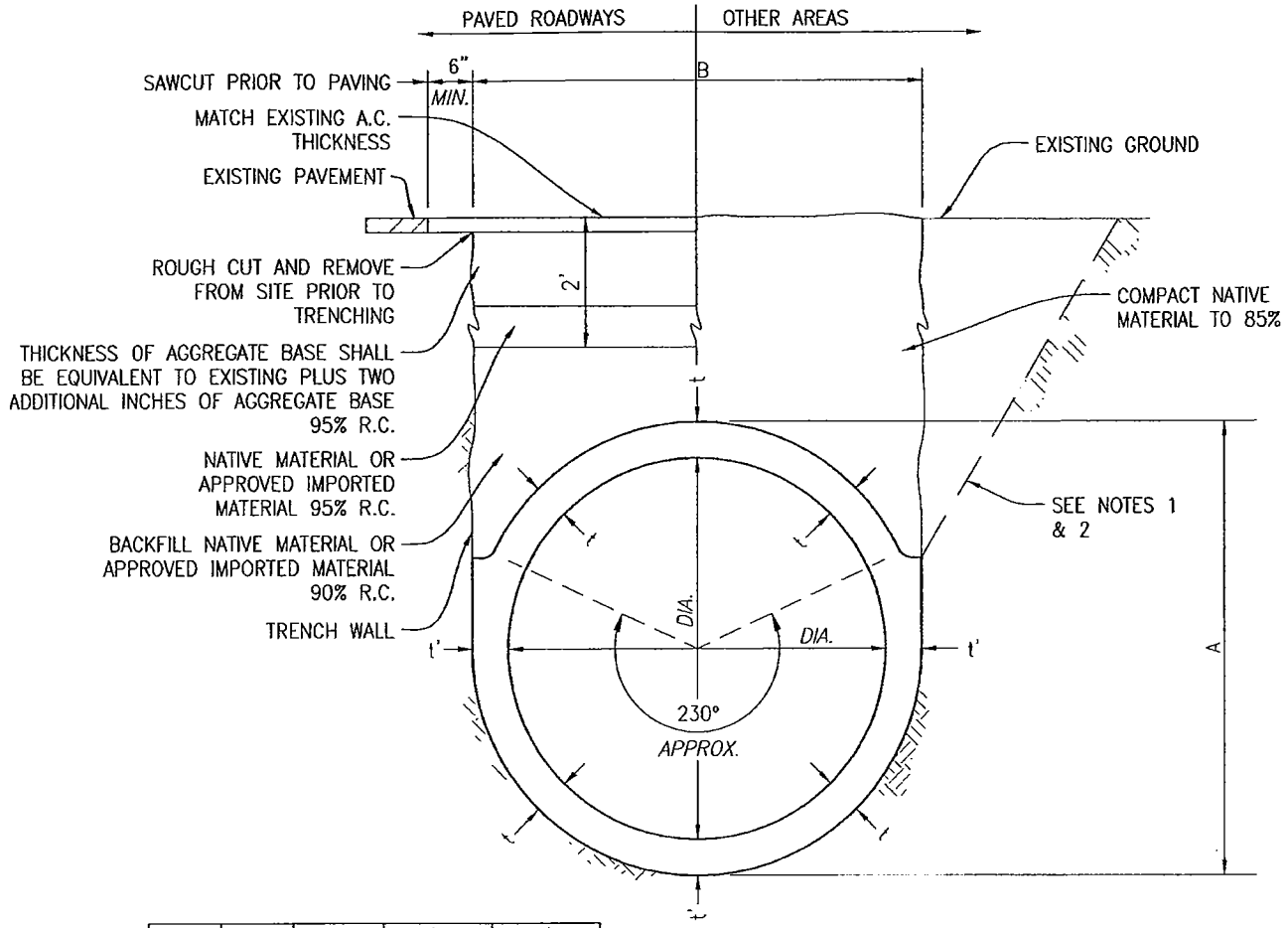

DIA.	A	MIN. B	t	t'
30"	36"	37"	3"	3"
36"	43"	44"	3 ½"	3 ½"
42"	50"	51"	4"	4"
48"	58"	59"	5"	5"
54"	65"	66"	5 ½"	5 ½"
60"	72"	73"	6"	6"
66"	79"	80"	6 ½"	6 ½"
72"	86"	87"	7"	7"
84"	100"	101"	8"	8"
96"	114"	115"	9"	9"

TYPICAL PIPE SECTION
30" THRU 96"

NOTES:

1. THE CONTRACTOR SHALL SUBMIT A DETAILED PLAN TO THE CITY ENGINEER PRIOR TO EXCAVATION, SHOWING DESIGN OF SHORING, BRACING, SLOPING OR OTHER PROVISIONS TO BE MADE FOR WORKER PROTECTION, IN ACCORDANCE WITH SECTION 6422 OF THE LABOR CODE OF CALIFORNIA.
2. THE MINIMUM REQUIRED WORKER PROTECTION SHALL BE AS DESCRIBED IN THE CONSTRUCTION SAFETY ORDERS OF THE DIVISION OF INDUSTRIAL SAFETY. VARIANCES THEREFROM SHALL BE PREPARED AND SIGNED BY A REGISTERED CIVIL ENGINEER OF THE STATE OF CALIFORNIA.
3. TRENCHES IN EXISTING PAVED AREAS SHALL BE EXCAVATED VERTICALLY, OR TO THE MOST NARROW PRACTICAL WIDTH AS SOIL CONDITIONS WILL PERMIT.

CITY OF PATTERSON IMPROVEMENT STANDARDS

CITY OF PATTERSON INCORPORATED 1919

C.I.P.P. STORM DRAIN AND TRENCH

APPROVED BY: Michael Willey DATE: 5/12/11

DRAWING NO. 8 - E

Feb 28, 2011 - 11:36am
P:\COP\Improvement Standards\Drawings\8 - E.dwg

DIA.	A	B	C	D	E	F	MIN. G
30"	46"	30"	9"	3"	56"	13"	3"
36"	53"	36"	9 ½"	3 ½"	56"	10"	3 ½"
42"	60"	42"	10"	4"	60"	9"	4"
48"	68"	48"	11"	5"	66"	9"	5"

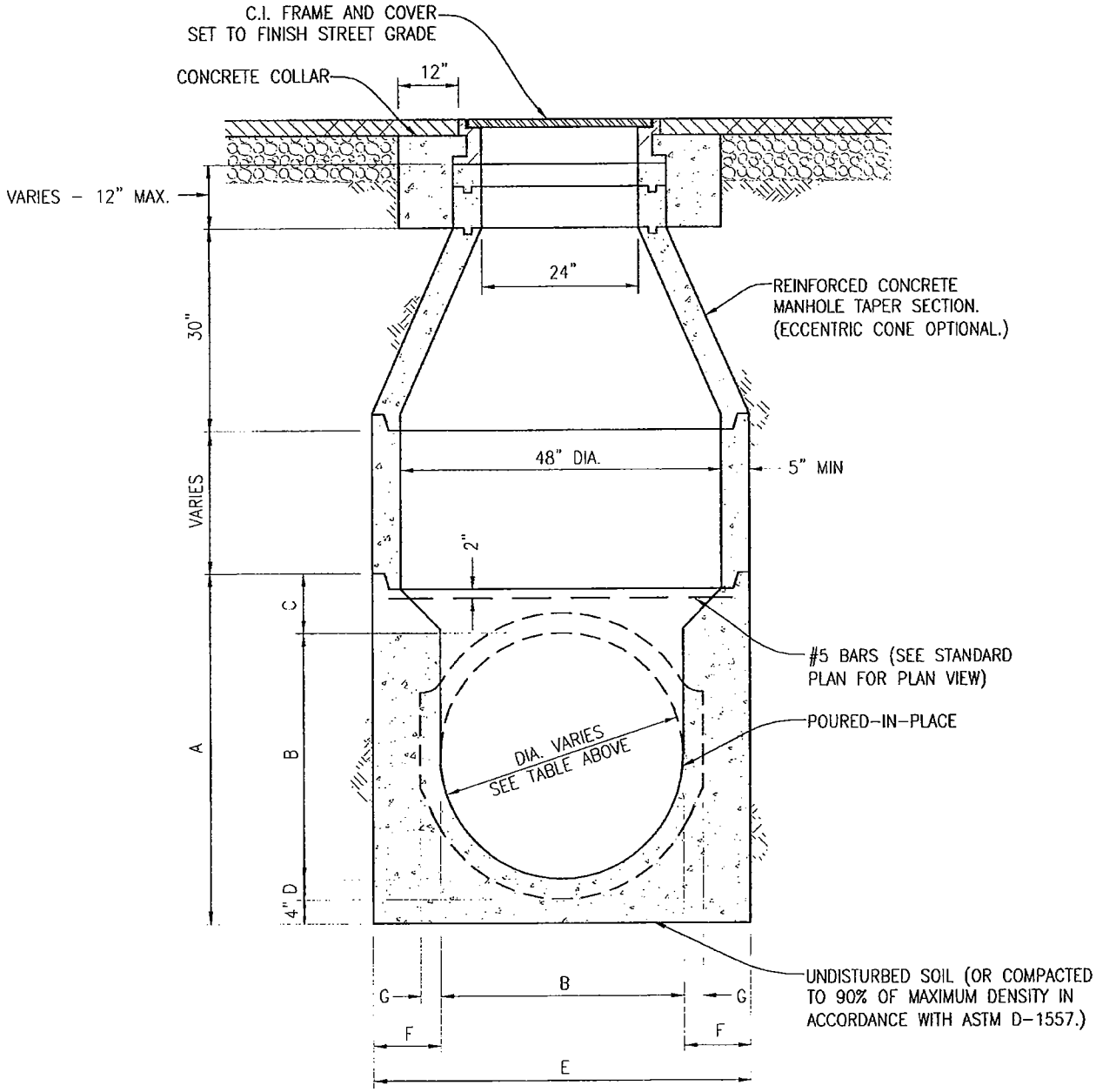

CITY OF PATTERSON IMPROVEMENT STANDARDS

STORM DRAIN MANHOLE FOR 30" - 48" C.I.P.P.

APPROVED BY: Michael Willett DATE: 5/12/11

DRAWING NO. 8 - F

Feb 28, 2011 – 11:37am
P:\COP\Improvement Standards\Drawings\8 – F.dwg

DIA.	A	B	C	D	E	F	MIN. G
54"	75"	54"	11 ½"	5 ½"	75"	10 ½"	5 ½"
60"	82"	60"	12"	6"	82"	11"	6"
66"	89"	66"	12 ½"	6 ½"	89"	11 ½"	6 ½"
72"	96"	72"	13"	7"	96"	12"	7"
84"	110"	84"	14"	8"	110"	13"	8"
96"	124"	96"	15"	9"	124"	14"	9"

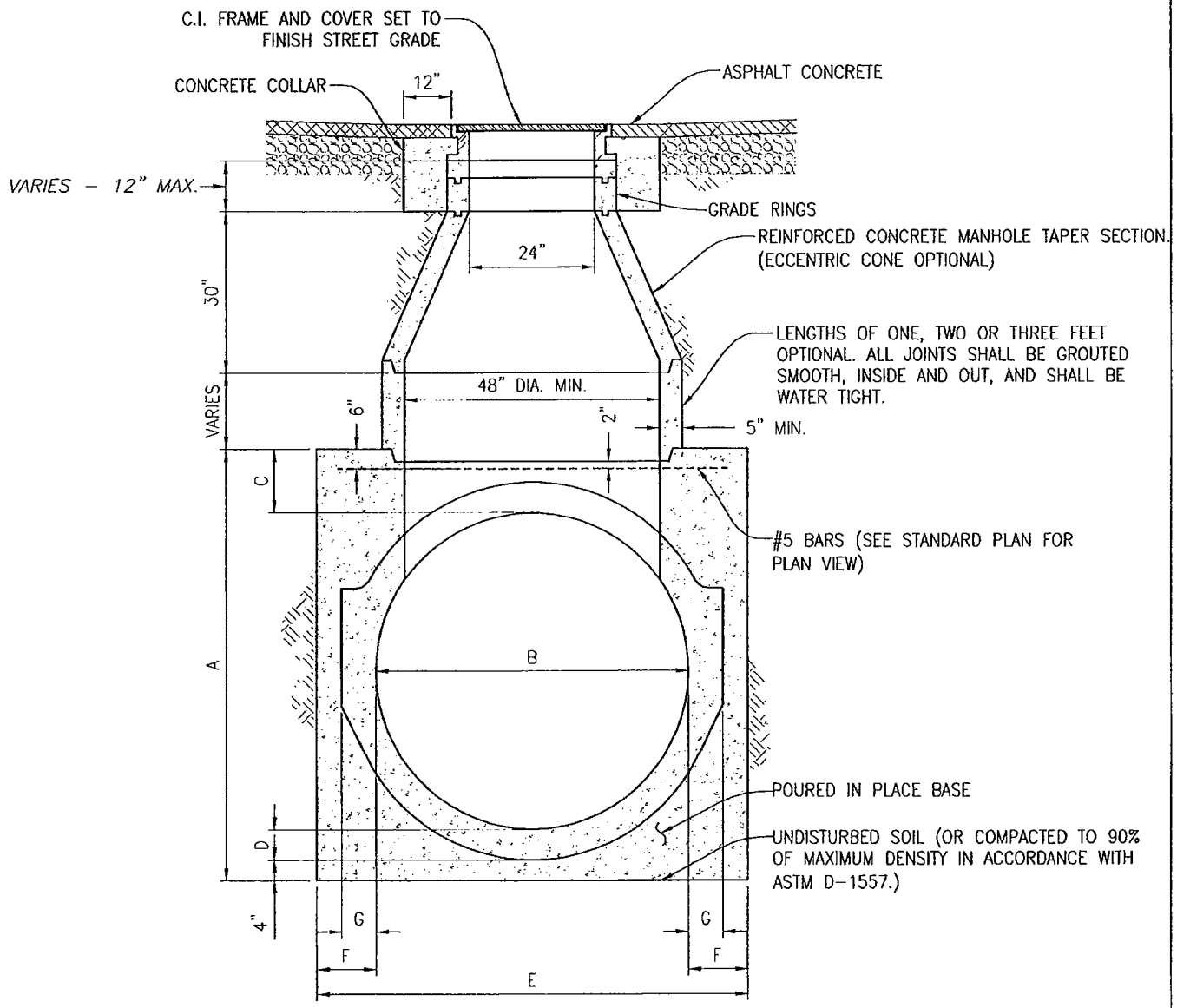

CITY OF PATTERSON IMPROVEMENT STANDARDS

STORM DRAIN MANHOLE FOR 54" - 96" C.I.P.P.

APPROVED: Michael Willett DATE: 5/12/11

DRAWING NO. 8 - G

SERVER: I:\DJ\LIBRARY\DETAILS\CITY OF PATTERSON\07/20/02/7 - C.DWG

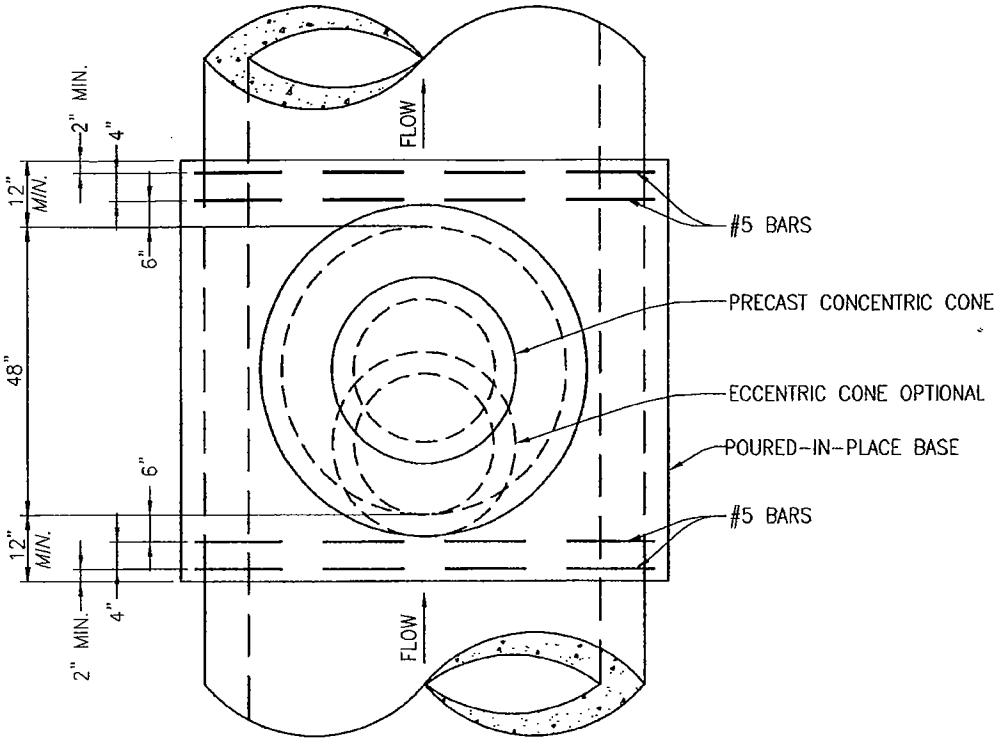

MANHOLE FOR 54"-96" C.I.P.P.

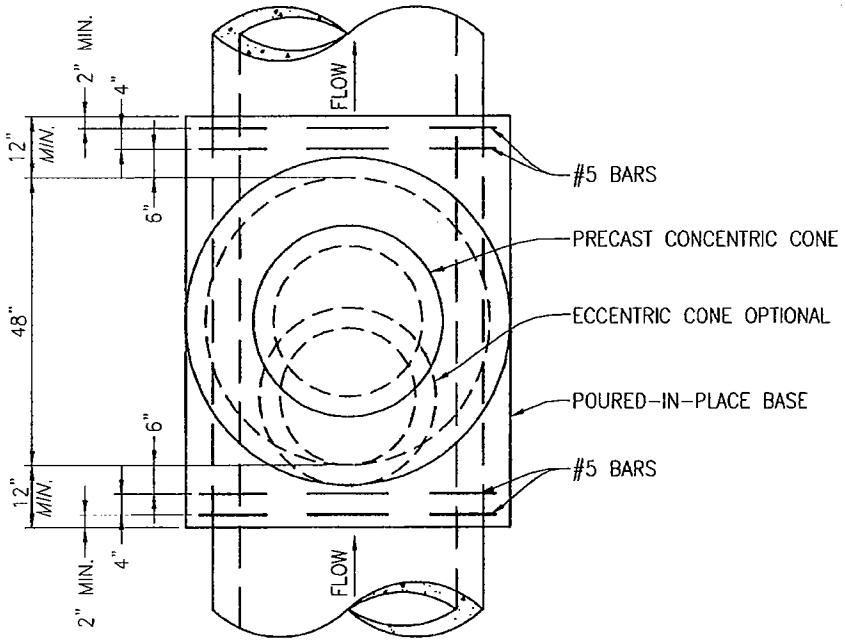

MANHOLE FOR 30"-48" C.I.P.P.

CITY OF PATTERSON IMPROVEMENT STANDARDS

STORM DRAIN MANHOLE PLAN VIEW (C.I.P.P.)

APPROVED BY: Michael Willett DATE: 5/12/11

DRAWING NO. 8 - H

Feb 28, 2011 - 11:38am
P:\COP\Improvement Standards\Drawings\8 - H.dwg

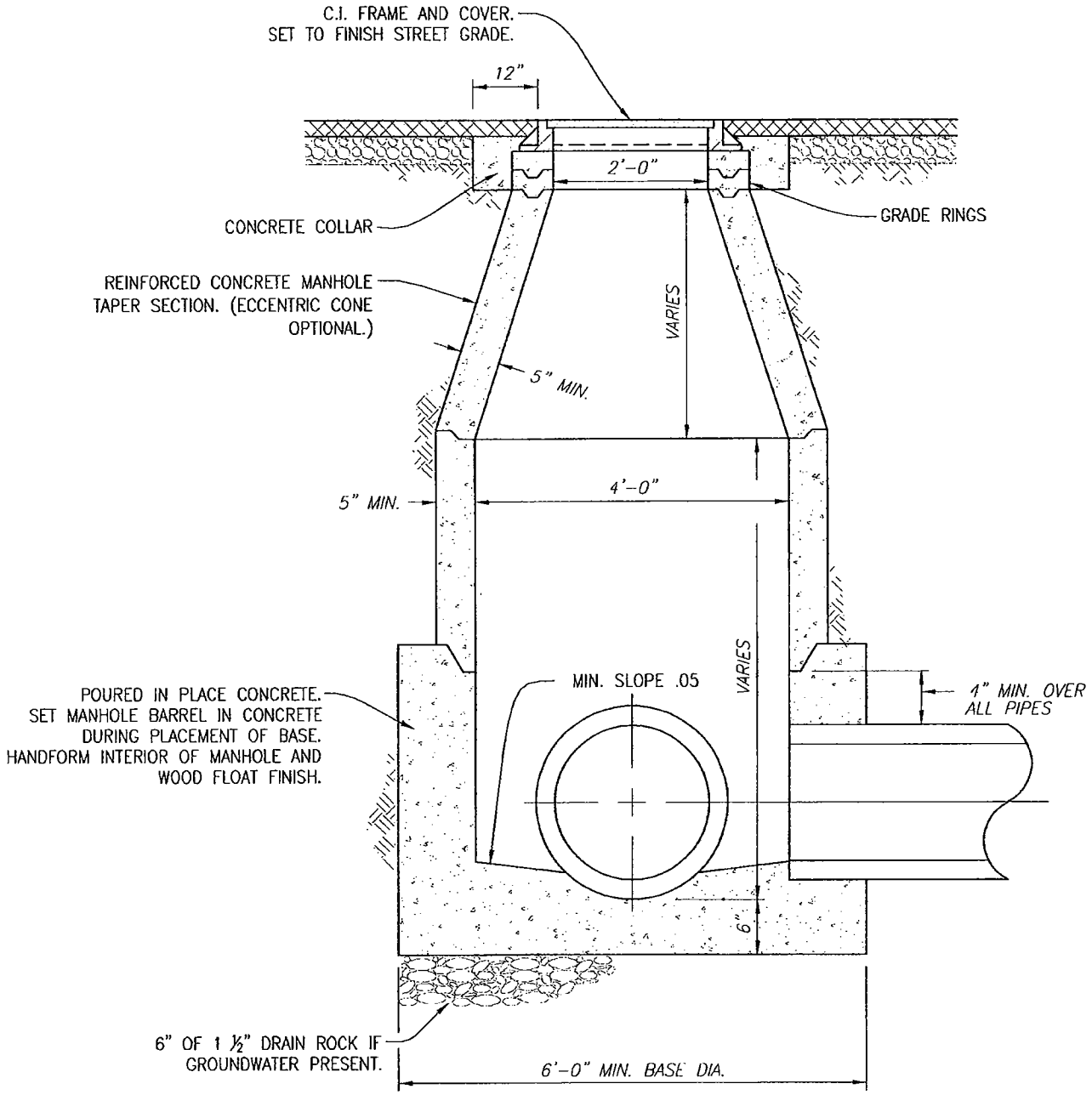

CITY OF PATTERSON IMPROVEMENT STANDARDS

STORM DRAIN MANHOLE

APPROVED BY: Michael Willett DATE: 5|12|11

DRAWING NO. 8 - 1

Feb 28, 2011 - 11:38am
P:\COP\Improvement Standards\Drawings\8 - 1.DWG

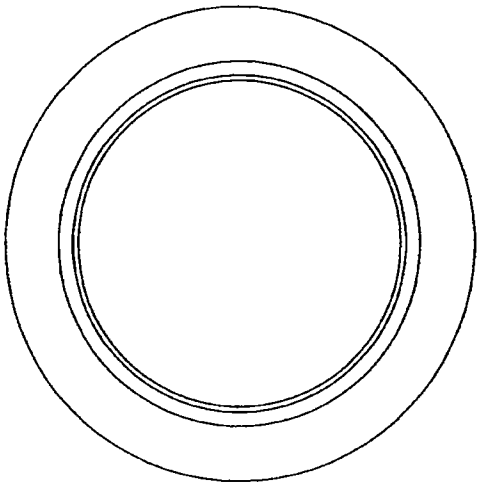

PLAN

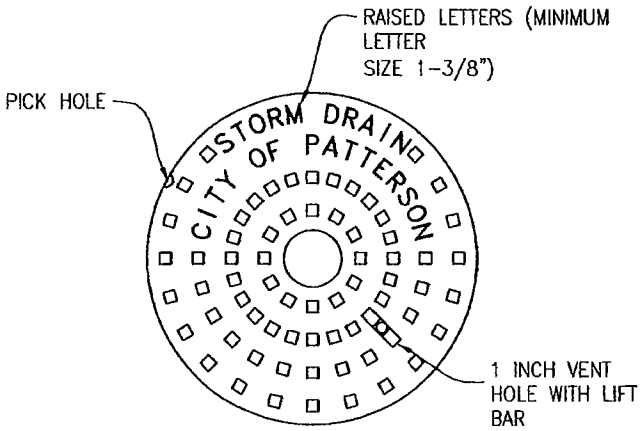

TOP

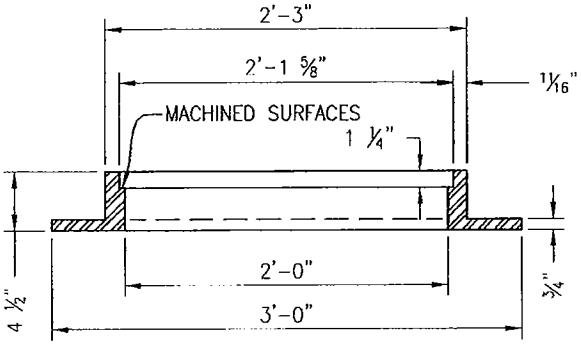

SECTION

MANHOLE FRAME DETAIL

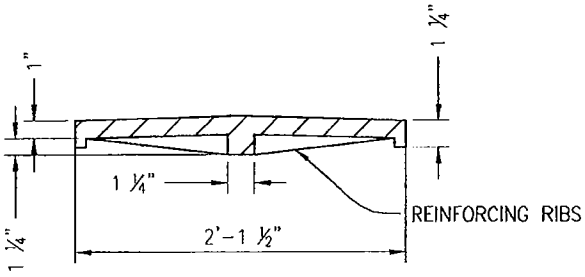

SECTION

MINIMUM WEIGHT OF FRAME AND COVER: 280 lbs.

MANHOLE COVER DETAIL

CITY OF PATTERSON IMPROVEMENT STANDARDS

CAST IRON MANHOLE FRAME AND COVER

APPROVED BY: Michael Willett DATE: 5/12/11

DRAWING NO. 8 - J

Feb 28, 2011 - 11:39am
P:\COP\Improvement Standards\Drawings\8 - J.dwg

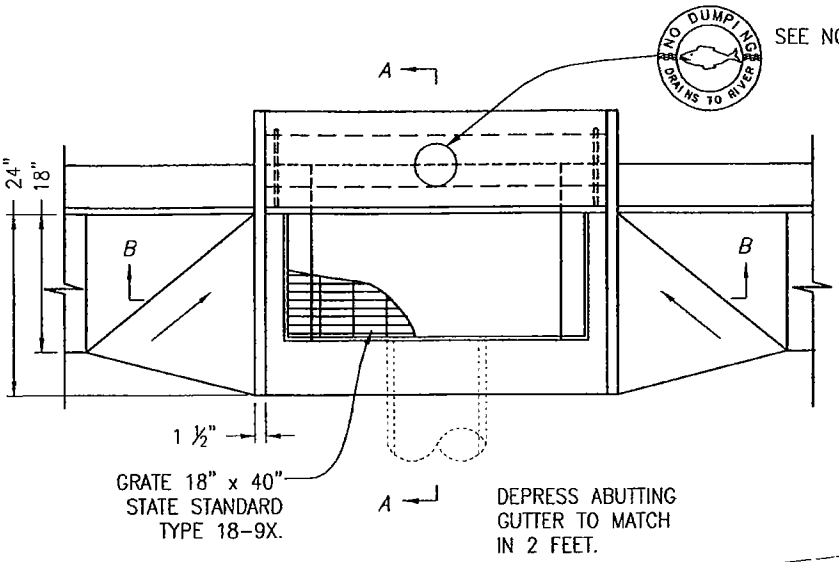

PLAN

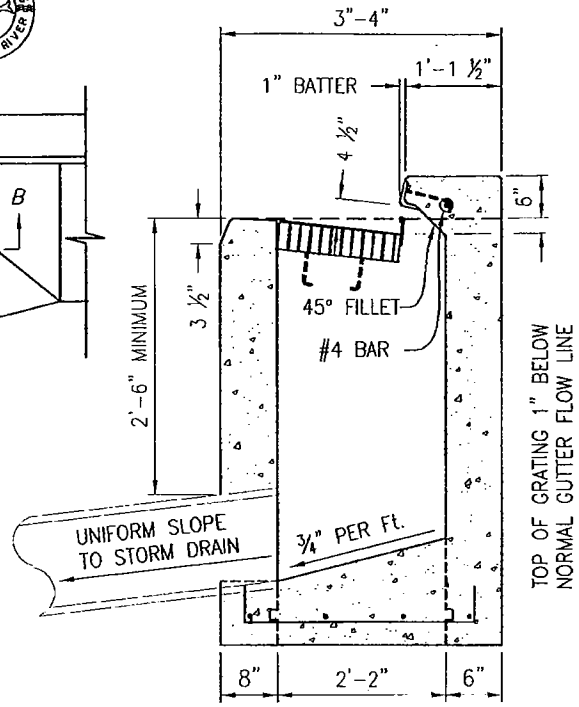

SECTION A-A

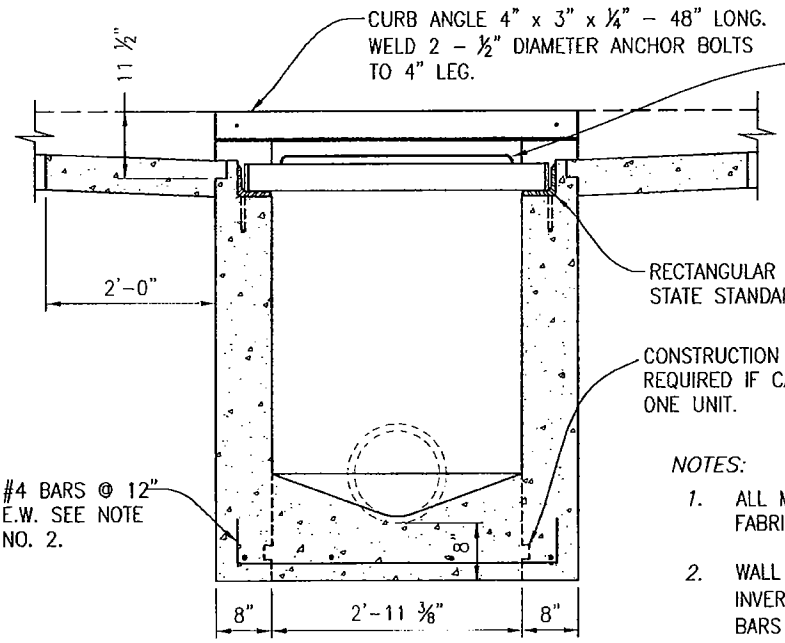

SECTION B-B

NOTES:

1. ALL METAL SHALL BE HOT DIP GALVANIZED AFTER FABRICATION.
2. WALL AND FLOOR REINFORCING NOT REQUIRED IF INVERT LESS THAN 8' DEEP, OTHERWISE USE No. 4 BARS AT 12" EACH WAY, CENTER IN WALLS.
3. DAS MANUFACTURING STANDARD CURB MARKING. INSTALL PER MANUFACTURER'S RECOMMENDATIONS.

CITY OF PATTERSON IMPROVEMENT STANDARDS

CITY OF PATTERSON INCORPORATED 1919

DRAIN INLET

APPROVED BY: Michael Willett DATE: 5/12/11

DRAWING NO. 8 - K

Feb 28, 2011 - 11:39am
P:\COP\Improvement Standards\Drawings\8 - K.dwg

SECTION 9 – PARKING

SPECIFICATIONS:

9.1 GENERAL 9-1
9.2 PARKING DESIGN GUIDE 9-1
9.3 HANDICAP PARKING REQUIREMENTS 9-2
9.4 PAVEMENT 9-3
9.5 STORM DRAINAGE 9-3

DRAWINGS:

9A OFF STREET PARKING STANDARDS
9B TYPICAL PARKING STALL STRIPING
9C TRASH ENCLOSURE
9D TRASH ENCLOSURE DETAILS

SECTION 9

PARKING

9.1 GENERAL

Parking lots shall be provided for commercial, industrial facilities and multi-family dwelling units containing more than four dwelling units located within the City. The minimum number of parking spaces for each use shall conform to the standards set forth in the Patterson Municipal Code. All parking stalls shall be marked to clearly delineate the parking spaces.

End stalls shall be protected from the turning movements of other vehicles through the use of raised curbing and landscaping. Raised end islands or peninsulas shall extend a maximum of 13 feet past the parking base line to minimize pedestrian tripping.

All areas not utilized for parking and vehicular circulation shall be landscaped. Landscaped and paved areas shall be separated by 6-inch high concrete curbs.

9.2 PARKING DESIGN GUIDE

To aid in the design of parking layouts, the following information is offered as a guide to meet the minimum requirements for off-street parking and the layout design of driver-parking lots under normal use conditions.

The following factors should be considered:

A. Sizes and Access: Each standard size off-street parking space shall have a minimum width of 9 feet and a minimum depth of 19 feet, exclusive of access drives or aisles, and shall be of useable shape, location, and condition. Compact spaces having a minimum width of 7-1/2 feet and a minimum depth of 15 feet, exclusive of access drives and aisles, shall be permitted, not to exceed 30% of the total required parking stalls. Small car spaces shall have "compact" or "small car" painted on the pavement at the entrance of each stall. End stalls and stalls adjacent to raised curbing shall be a minimum of 1 foot wider than the normal stall width. The length of the space may be reduced by 2 feet if landscaped planters of sufficient width are used as curb stops.

B. Entrances, exits and location of nearest intersection, in each direction.

C. The width of the parking area normally determines the parking angle to be used.

D. Right angle (90 degrees) parking is usually more efficient and provides two-way movement in the aisles and shorter cruise distance. However, it generally requires more turning effort.

E. Angle parking (other than 90 degrees) affords greater ease in parking and allows for narrower aisles but it requires one-way circulation.

F. Delineating Striping: All parking spaces shall be clearly delineated using double 4 inch wide striping. Length of striping shall be 17 feet for standard parking spaces and 13 feet for compact parking spaces. Length of striping may be reduced by 2 feet if landscaped planters of sufficient width are used as curb stops.

With these factors in mind, an accurate drawing of the proposed parking area should be prepared showing such details as sidewalks, curb cuts for driveways, use of abutting properties, immoveable obstacles, flow of on-street traffic in the area, and other pertinent information. This drawing can be used to aid in the determination of a layout pattern based on selection of the best of all possible parking arrangements. The best arrangement should provide the maximum number of parking spaces with aisles and stalls designed for one-turn driver parking.

9.3 HANDICAP PARKING REQUIREMENTS

A. Each parking area associated with any type of land use listed in the Patterson Zoning Code, except for single-family and two-family residential dwellings, shall include a number of parking spaces specifically reserved for vehicles licensed or authorized by the State of California for use by physically challenged/disabled drivers in accordance with the following:

Total Spaces in Parking Area	Minimum Number of Spaces Required for Physically Challenged/Disabled Drivers
1 - 25	1 Van Accessible Space
26 - 50	2 including 1 Van Accessible Space
51 - 75	3 including 1 Van Accessible Space
76 - 100	4 including 1 Van Accessible Space
101 - 150	5 including 1 Van Accessible Space
151 - 200	6 including 1 Van Accessible Space
201 - 300	7 including 1 Van Accessible Space
301 - 400	8 including 1 Van Accessible Space
401 - 500	9 including 1 Van Accessible Space
501 - 1000	2% including 3 Van Accessible Spaces

One space for each 200 spaces thereafter.

B. Such parking spaces shall be located within a reasonable proximity of any conveniently accessible entrance to the building served by the parking area.

9.4 PAVEMENT

All parking stalls and drive aisles shall be paved with either asphalt concrete or Portland cement concrete.

A. Asphalt Concrete

Minimum slope for asphalt concrete shall be 1.5 percent. This slope requirement may be reduced to 1 percent by the City Engineer if it can be shown that meeting the 1.5 percent requirement is not practical.

B. Portland Cement Concrete

Unreinforced and reinforced Portland cement concrete pavement shall be designed and constructed in accordance with the recommendations of the American Concrete Institute set forth in ACI 330R-87, "Guide For Design And Construction Of Concrete Parking Lots." Design calculations meeting the criteria set forth in the above ACI guide shall be submitted to the City Engineer for review and approval.

Minimum finished grade slope shall be 1.0 percent. If it can be shown that meeting the 1.0 percent requirement is not practical, the slope may be reduced to 0.75 percent with the approval of the City Engineer.

9.5 STORM DRAINAGE

Design of storm drainage piping for parking lots shall be based on predicted run-off from a 5 year storm using the Rational Formula Q = CIA. Where Q equals the predicted run-off in cubic feet per second; C the coefficient of run-off; I the intensity of the rainfall in inches per hour; and A the drainage area tributary to the parking lot in acres. Run-off coefficients and intensity of rainfall shall be determined from Drawing No. 8-B.

Roof to parking lot time shall be assumed to be 10 minutes. Manning's equation shall be used for pipe flow design. When using smooth walled plastic pipe, the roughness coefficient, "n" value, shall be 0.010. Local entrance and exit losses shall be included in the calculation of head loss. Local loss coefficients (K) shall be as follows:

LOCAL LOSS COEFFICIENTS

Local Loss	K
Re-entrant Inlets	1.0
Square Edge and Beveled Inlets	0.5
All Exits	1.0
90° Elbow	0.3
45° Elbow	0.2
Line Flow Tee	0.2
Branch Flow Tee	1.0

If curb drains are used, all grate elevations shall be a minimum of 0.6 feet above the invert of the discharge pipe at the curb (exit).

If drain basin lines discharge into the City's storm drain system at the back of a City catch basin, the grate elevations in the parking lot shall be a minimum of 0.3 feet above the City's catch basin grate.

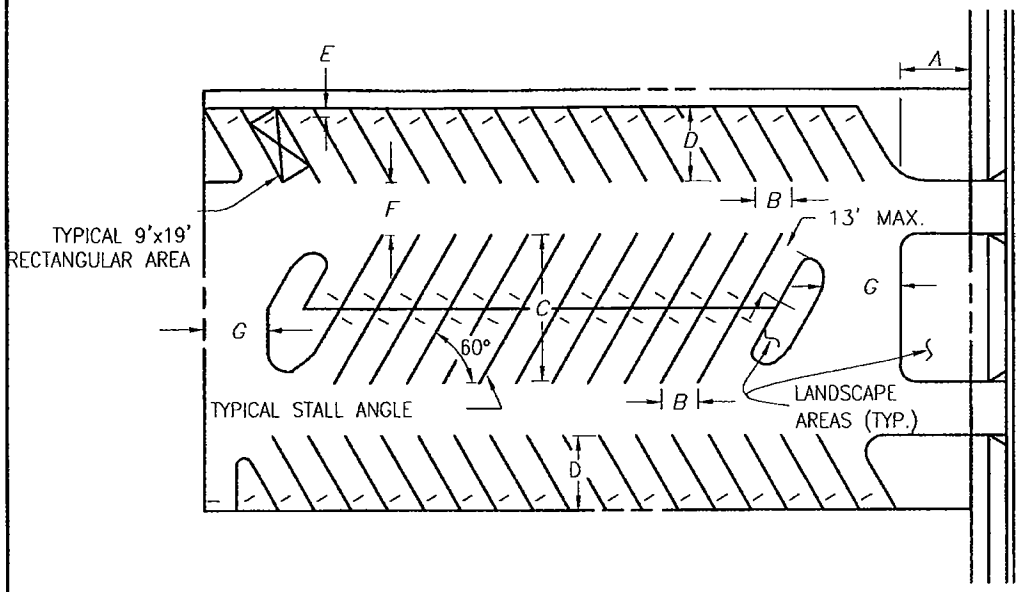

THE REQUIRED FRONT SETBACK DIMENSION (A) IS AS SPECIFIED IN THE ORDINANCE(S) CITY OF PATTERSON FOR THE ZONING DISTRICT IN WHICH THE PARKING LOT IS TO BE LOCATED

PARKING ANGLE TO DRIVEWAY		45°	50°	55°	60°	70°	80°	90°
STALL WIDTH	B	12.7'	11.8'	11.0'	10.4'	9.6'	9.1'	9.0'
STALL DEPTH	C	33.2'	34.8'	36.3'	37.5'	38.7'	39.0'	38.0'
STALL DEPTH	D	19.8'	20.7'	20.7'	21.0'	20.9'	20.3'	19.0'
DRIVEWAY WIDTH	F	8.8'	11.6'	11.6'	15.0'	18.2'	22.4'	27.0'

NOTES:

1. ANY DRIVEWAY USED FOR BOTH INGRESS AND EGRESS TO AND FROM A PARKING LOT AND NOT DIRECTLY SERVING PARKING STALLS SHALL HAVE A MINIMUM WIDTH OF TWENTY FOUR (24) FEET. ANY DRIVEWAY USED ONLY FOR EITHER INGRESS OR EGRESS TO OR FROM A PARKING LOT AND NOT DIRECTLY SERVING PARKING STALLS SHALL BE A MINIMUM OF TWELVE (12) FEET IN WIDTH.
2. THE ABOVE TYPICAL PARKING LOT DIAGRAM, PARKING STALL AND DRIVEWAY DIMENSION TABLE SHALL DETERMINE THE MINIMUM REQUIREMENTS FOR A PARKING LOT PLAN.
3. THE MINIMUM DRIVEWAY WIDTH (F) AT ANY PARKING STALL ANGLE LESS THAN 45°, INCLUDING PARALLEL STALLS, IS 8.8 FEET.
4. THE TURNAROUND OR END DRIVEWAY WIDTH (G) SHALL BE A MINIMUM OF 18 FEET.
5. THE WHEELSTOP SET BACK DIMENSION (E) SHALL BE A MINIMUM OF 2 FEET FOR ANY PARKING PLAN.

CITY OF PATTERSON IMPROVEMENT STANDARDS

OFF-STREET PARKING STANDARDS

APPROVED BY: Michael Willett DATE: 5/12/11

DRAWING NO. 9 - A

Feb 28, 2011 - 11:40am
P:\COP\Improvement Standards\Drawings\9 - A.DWG

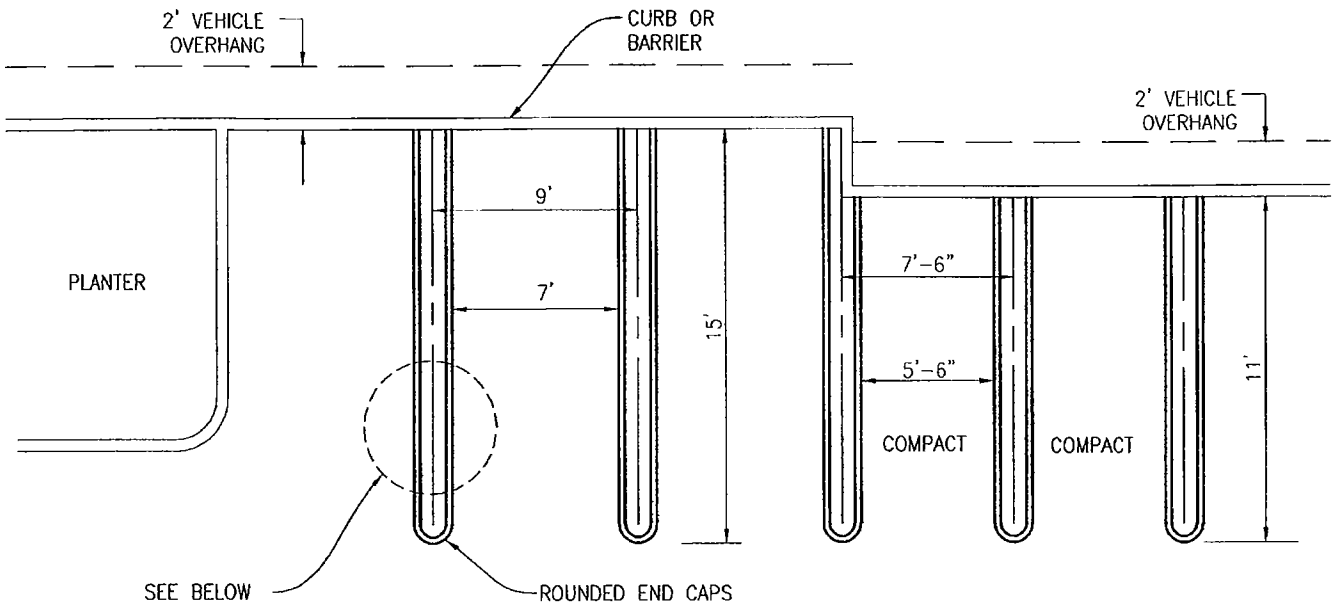

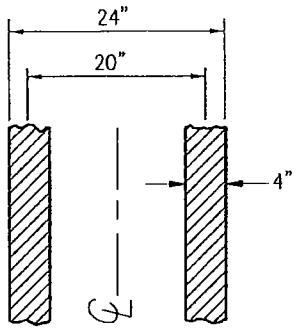

STRIPING DETAIL

NOTE:

STALLS SHALL BE DOUBLE STRIPED AS SHOWN IN THE DIAGRAM. PAINTED LINE WIDTH SHALL BE 4". IF BUTTONS ARE USED THEY SHALL BE 3 ¼" – 4" IN DIAMETER SPACED NO MORE THAN 3' ON CENTER. THE LINES SHALL BE LAID OUT AS PER DIAGRAM. EITHER SEMICIRCULAR CAP OR A STRAIGHT CAP MAY BE USED.

CITY OF PATTERSON IMPROVEMENT STANDARDS

TYPICAL PARKING STALL STRIPING

APPROVED: Michael Willett DATE: 5/12/11

DRAWING NO. 9 - B

Feb 28, 2011 – 11:40am
P:\COP\Improvement Standards\Drawings\9 – B.DWG

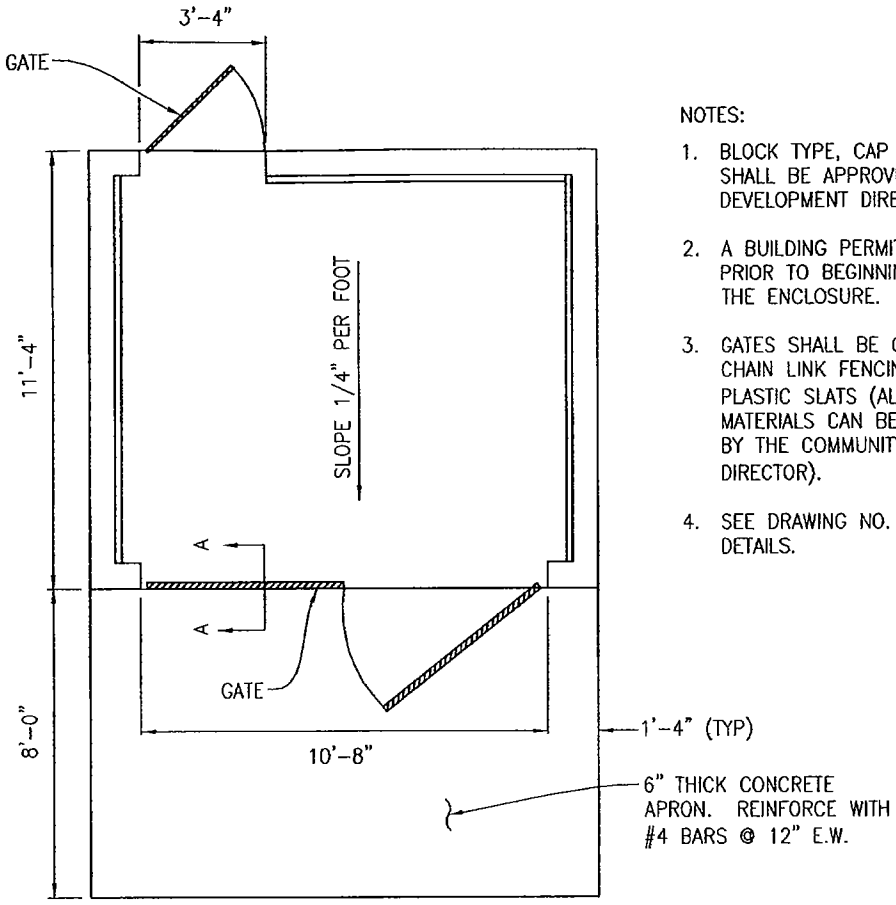

PLAN

NOTES:

1. BLOCK TYPE, CAP STYLE, AND COLOR SHALL BE APPROVED BY THE COMMUNITY DEVELOPMENT DIRECTOR.
2. A BUILDING PERMIT SHALL BE OBTAINED PRIOR TO BEGINNING CONSTRUCTION ON THE ENCLOSURE.
3. GATES SHALL BE CONSTRUCTED FROM CHAIN LINK FENCING MATERIAL WITH PLASTIC SLATS (ALTERNATIVE GATE MATERIALS CAN BE USED IF APPROVED BY THE COMMUNITY DEVELOPMENT DIRECTOR).
4. SEE DRAWING NO. 9-D FOR ADDITIONAL DETAILS.

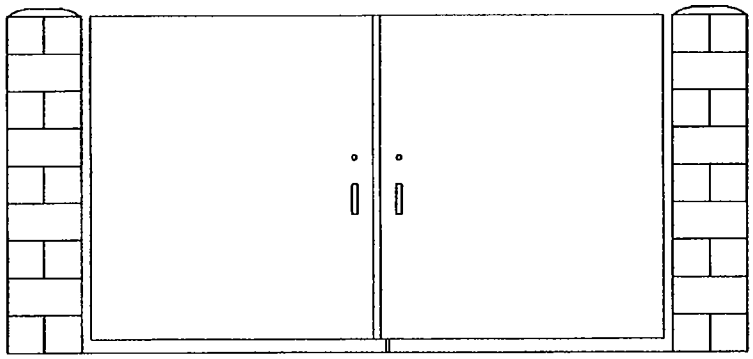

FRONT VIEW

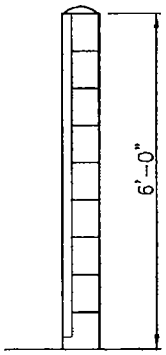

SECTION A – A

CITY OF PATTERSON IMPROVEMENT STANDARDS

TRASH ENCLOSURE

APPROVED BY: Michael Willett DATE: 5/12/11

DRAWING NO. 9 - C

Feb 28, 2011 – 11:41am
P:\COP\Improvement Standards\Drawings\9 – C.dwg

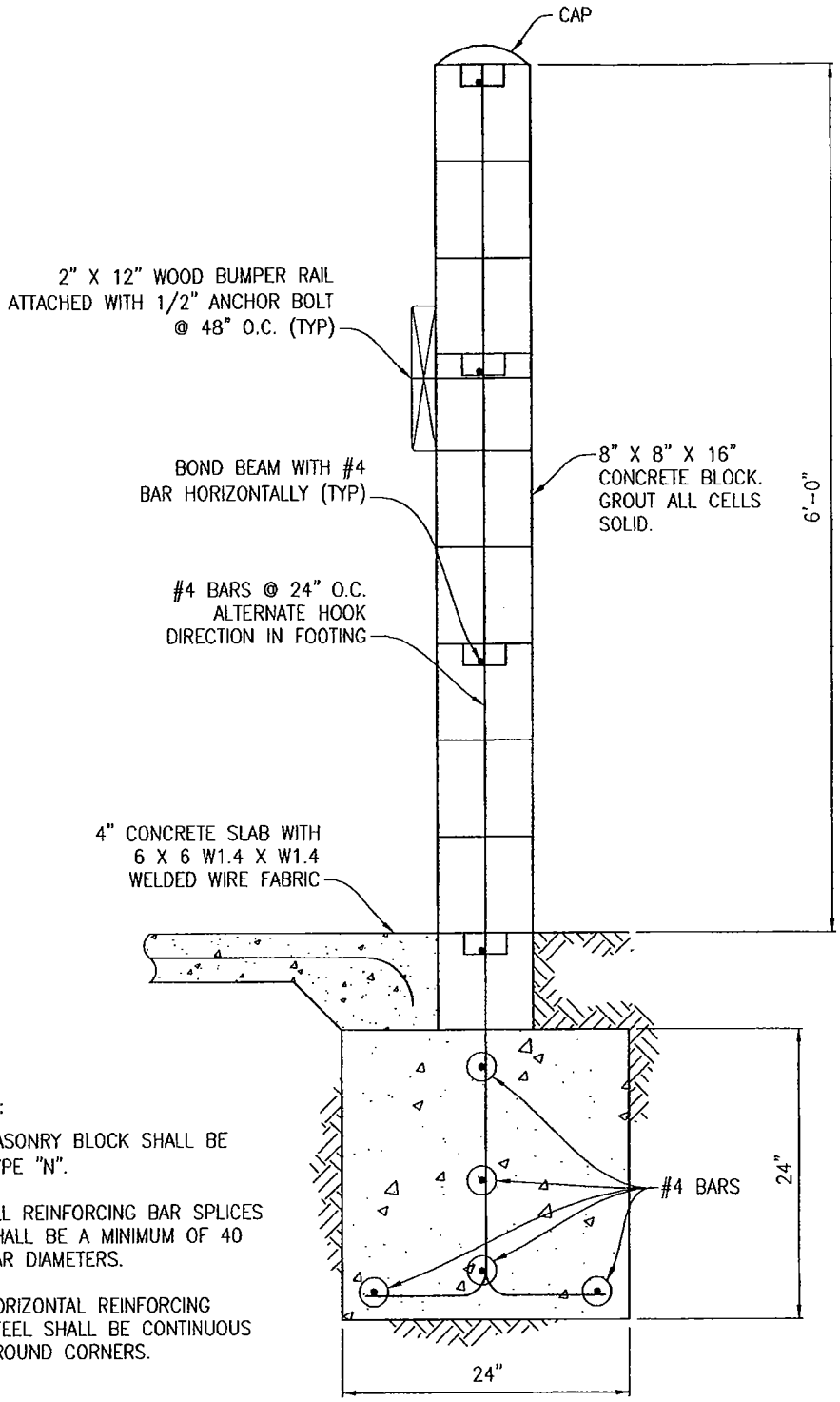

NOTES:

1. MASONRY BLOCK SHALL BE TYPE "N".
2. ALL REINFORCING BAR SPLICES SHALL BE A MINIMUM OF 40 BAR DIAMETERS.
3. HORIZONTAL REINFORCING STEEL SHALL BE CONTINUOUS AROUND CORNERS.

TYPICAL WALL SECTION WITH FOOTING

CITY OF PATTERSON IMPROVEMENT STANDARDS

TRASH ENCLOSURE DETAILS

APPROVED BY: Michael Willey DATE: 5/12/11

DRAWING NO. 9 - D

Feb 28, 2011 - 11:41am
P:\COP\Improvement Standards\Drawings\9 - D.dwg